Operation Maintenance

Horizon™

Single-Stage Steam or Hot Water Absorption Chiller

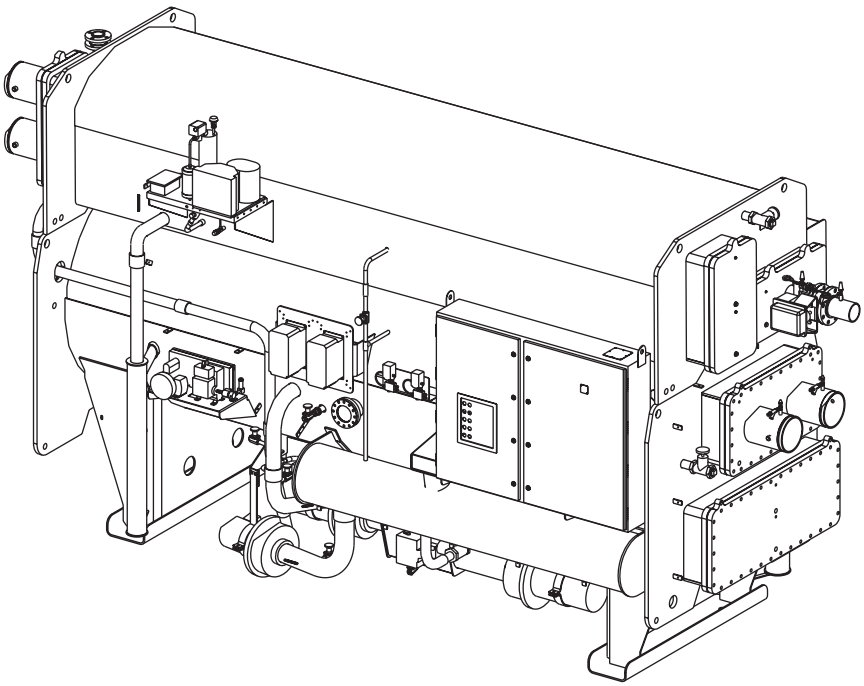

Unit Model: ABSD

X39640650010

ABS-M-10A-E4

General Information

How to Use This Manual

Contents

This manual describes the operation and maintenance requirements for the Trane Horizon Single-Stage Steam or Hot Water Absorption Chiller. The instructions are intended to provide the machine operator with sufficient detailed information to safely operate the chiller This manual has been developed and approved within a quality system certified as conforming to ISO 9001.

Contents

General Information

Mechanical Specifications

General
The Trane Horizon™ Model ABSD chiller is a complete single effect steam or hot water fired absorption chiller package built in an ISO 9001 environment. Chiller consists of generator/condenser section, evaporator/absorber section, controls, pumps, heat exchanger, and energy control valve. All Horizon chillers are of hermetic design, factory assembled and leak tested prior to shipment. Horizon chillers can be separated and shipped disassembled for rigging purposes. Horizon chiller controls are factory mounted and wired including micro electronic control panel, sensors and purge system, energy valve can be factory mounted and wired as an option on steam fired units. Horizon chillers are painted prior to shipping with two coats of a water base air dry primer. Standard method of shipment is by truck from the USA.

Generator/Condenser-Evaporator/Absorber
The shell material is carbon steel. Standard generator tube material is cupro-nickel, evaporator is copper, absorber is cupro-nickel and condenser is copper. Tubes are mechanically rolled into the tube sheets and are replaceable from either end. Condenser, evaporator and absorber tube supports are fixed. Generator consists of fixed and floating tube supports to allow for even tube expansion. Solution spray systems are replaceable from end of unit without sacrificing the hermetic integrity of the unit.

Generator/Condenser-Evaporator/Absorber
Design working pressure for the water boxes is 150 psig [10.5 kg/cm2]. All tube bundles are tested at 150 percent of design working pressure. All water boxes have gasketed removable covers for access. Optional Marine type water boxes can be provided on the condenser and absorber section. Water connections are provided with either victaulic or raised-face flanged connections.

Heat Exchangers
A brazed plate solution heat exchanger is provided to reduce energy use and improve unit performance. Heat exchanger surfaces are 300 series stainless steel.

Pumps
Solution and refrigerant are circulated by means of three hermetic, single-stage centrifugal pumps. The pump impeller is cast iron with a steel shaft supported by two tapered carbon bearings. The bearings are lubricated and the motor is cooled by the fluid that is pumped. An adjustable frequency drive is provided on the generator pump and absorber pump to provide solution control.

Automatic Purge System
The purge system utilizes an eductor for moving non-condensables to the condenser, Purifier™ purge to collect the non-condensables in an external storage tank, and vacuum pump for removal of the non-condensables. The purge operates automatically to remove non-condensables from the unit during periods of chiller operation and shutdown. Logging of purge information is provided via the unit control panel.

Generator
The shell is carbon steel. Tube sheets are steel and standard generator tubes are constructed of cupro-nickel. The generator has fixed and floating tube supports to allow for even tube expansion. The steam side of the generator is designed and stamped for 50-PSI ASME construction. Generator/condenser includes rupture disk, which is sized to meet ANSI/ASHRAE B 15.

Lithium Bromide Filter
The filter system consists of the filter assembly and the associated piping and filter isolation valves needed for operation and maintenance. The main filter body is stainless steel with a replaceable element. The filter isolation valves allow service of the filter assembly without disturbing operation of the rest of the machine.

Machine Description

The following chapter contains machine identification of major components and warning and caution label locations. The items identified are referenced throughout this manual in each applicable section.

Figure 1 illustrates the major components of a typical ABSD Absorption Chiller.

Figure 2 identifies control panel labels, tags and warning or cautions that pertain to unit identification, installation and operation.

General Information

Component Identification and Location

A typical Horizon ABSD steam machine is illustrated in Figure 1. Major components are identified in a front, back, right-end, and left-end view. Figure 2 illustrates the machine labels location.

Figure 1 – Typical 500 Two-Stage Steam Machine

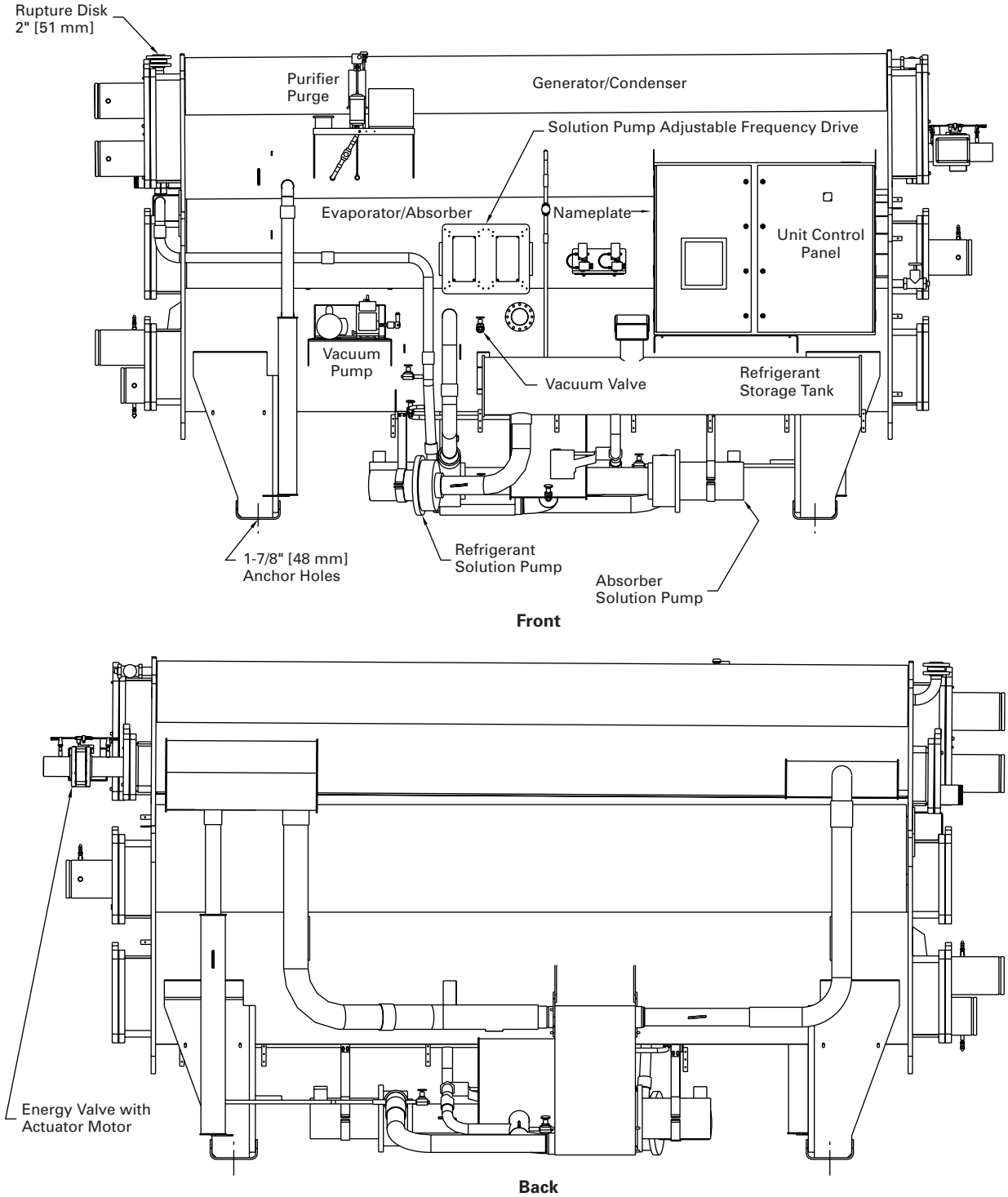

General Information

Figure 1 (Continued) – Typical 500 Two-Stage Steam Machine

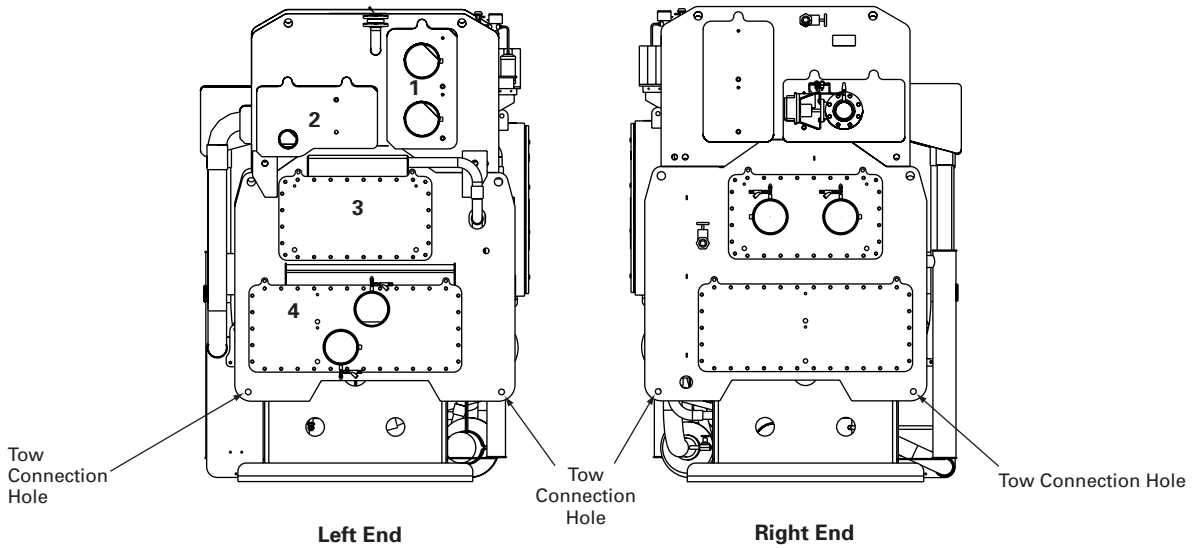

Figure Notes:
1 = Condenser
2 = Generator
3 = Evaporator
4 = Absorber

General Information

Machine Panel Labeling
The unit control panel ships with the labeling indicated in Figure 2. The various labels are identified as well as the ship with literature pieces.

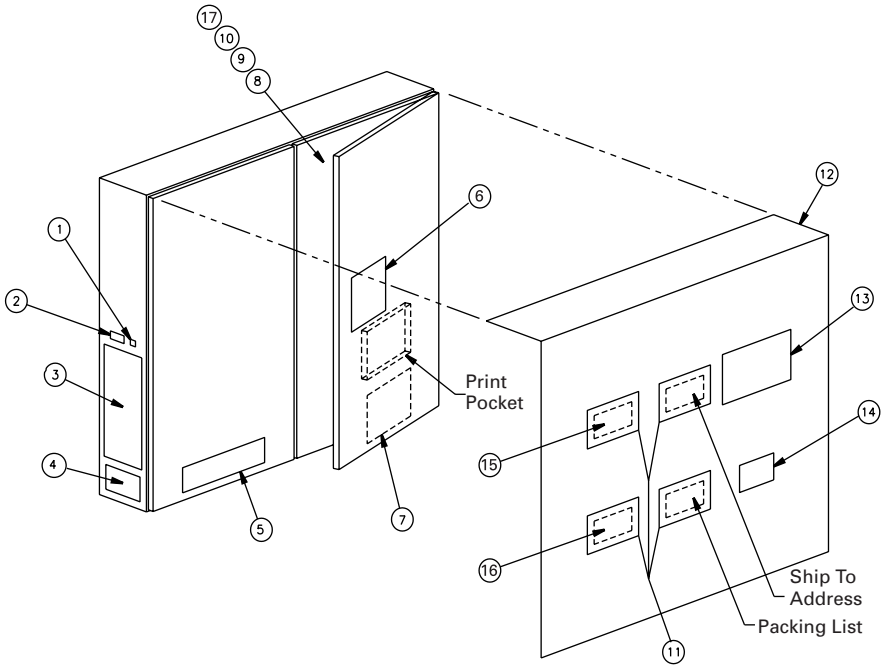

Figure 2 – Machine Labels Location

Legend

1. C.E. Compliance Label
2. ETL Listing Label
3. Nameplate Label
4. Customer Notes
5. Nameplate (Horizon)
6. Voltage Warning Label
7. Field Wiring Connection Diagram
8. Flat 9" x 12" [229 x 305 mm] Plastic Bag *
9. Operation and Maintenance Manual
10. Installation Manual
11. Poly Clear Envelope
12. Plastic SH Antistatic Foam
13. Lift/Move/Level Label
14. Inspect/Damage Label
15. Customer ID Tag
16. Customer Marked Package Tag
17. AFD Drive Manuals

*Contains installation and operation/maintenance, AFD drive manuals and includes as-built schematic wiring diagram prints (laminated).

Note: UCP panel "keys" ship in an envelope taped behind the control panel.

General Information

Nameplate

The ABSD unit nameplate is located on the chiller control panel. The nameplate illustrated is an ABSD 800 ton, Single -Stage Steam Absorption.

Note: For temperature, pressure drops, and water flow data see the order write-up.

The Unit Nameplate contains very important service information such as the unit serial number, sales order number and the service model number. Always have this information readily available when requesting service.

Nameplate

TRANE

Trane Horizon Absorption Series
Single-Stage Absorption Liquid Chiller

Catalog Model Number
ABSD800

Service Model Number
ABSD080GF0KXXXXXANXXAVAMBEEBGAHDCAXXXXAXAXXXX0

Sales Order Number	Unit Serial Number
AXB123	L00D12345M

Maximum Inlet Steam Pressure: 14 PSIG

Electrical Characteristics

Rated Voltage:	460 Volt 60 HZ 3 PH
Voltage Utilization Range:	414-506 VAC
Rated Current:	39.0 Amps
Minimum Circuit Ampacity:	47.0 Amps
Max Overcurrent Protective Device:	50.0 Amps
Purge Compressor RLA:	4.8 Amps
Control Circuit:	115 VAC 2000VA

Motors	KW	FLA
Purge Pump:	.19	4.4
Refrigerant Pump:	3.7	2.0
Absorber Solution Pump:	5.6	15.0
Low Temp Solution Pump:	3.7	12.0

Service Literature

Installation Manual	ABS-IN-10A
Operation/Maintenance. Manual	ABS-M-10A

Manufactured Under the Following U.S. Patents:
4223539, Other Patents Pending

This advanced model ABSD HORIZON Single-Stage Absorption Unit was developed with the assistance of the Gas Research Institute.

Product Description:

MODL ABSD	DSEQ FO	NTON 800
VOLT 460	BURN NSEL	BOPA NSEL
FTAA NSEL	SMHC NSEL	ENSR STM
ENPR 50	PVCN STD	PURG AUTO
LGTM SB04	HGTM NSEL	CDTM SB09
EVTM ES12	ABTM SB00	GNWA GN02
CAWA CA17	EVWA EV01	CAWC RERE
EVWC LEFR	CAFT WTR	EVFT WTR
EVLV BF03	EVIN FACT	EVPN SSTL
UPNT SFPT	WCNM SNMP	SPKG DAU
ELPP SELP	PPCO NFDS	LCLD CLDO
WVUO YES	OPTM YES	AFDS YES

General Information

Service Model Number
Single Stage Absorption
Standard Options Only

Service Model digit / variable		Description	Selection
1 - 4		Absorption Unit Model	
	ABSD		Single Stage Absorption
5 - 7		Unit Nominal Tonnage	
	050		500 Nominal Tons
	060		600 Nominal Tons
	070		700 Nominal Tons
	080		800 Nominal Tons
	097		975 Nominal Tons
	110		1100 Nominal Tons
	122		1225 Nominal Tons
	135		1350 Nominal Tons
8		Unit Voltage	
	A		190 Volt - 50 HZ
	B		200 Volt - 60 HZ
	C		220 Volt - 50 HZ
	D		230 Volt - 60 HZ
	E		380 Volt - 50 HZ
	F		415 Volt - 50 HZ
	G		460 Volt - 60 HZ
	H		575 Volt - 60 HZ
9		Unit Energy Source	
	J		Steam Energy Source
	G		Hot Water Energy Source
10		Design Sequence	
11		Design Sequence	
12		Generator Waterbox Design Pressure	
	K	Steam - 50 PSIG	ASME Required
	M	Hot Water - 150 PSIG	ASME Required
	N	Hot Water - 400 PSIG	ASME Required
	E		Pressure Vessel Construction
			Standard construction (includes ASME generator)
13	X	Not Applicable	
14	X	Not Applicable	
15	X	Not Applicable	
16	X	Not Applicable	
17	X	Not Applicable	
18 - 19		Low-Temperature Generator Tubes	
	AN		.028 Wall 90-10 Cupro-Nickel Smooth Surface
	AP		.035 Wall 90-10 Cupro-Nickel Smooth Surface
	AR		.049 Wall 90-10 Cupro-Nickel Smooth Surface
	BD		.028 wall 409 Stainless Steel Smooth Surface
20	X	Not Applicable	
21	X	Not Applicable	

General Information

Service Model digit / variable		Description	Selection
22 - 23		Condenser Tubes	
	AV		.028 Wall Copper Smooth Surface
	AW		.035 Wall Copper Smooth Surface
	AN		.028 Wall 90-10 Cupro-Nickel Smooth Surface
	AP		.035 Wall 90-10 Cupro-Nickel Smooth Surface
	AR		.049 Wall 90-10 Cupro-Nickel Smooth Surface
	BF		.028w 316L Stainless Steel Smooth Surface
24 - 25		Evaporator Tubes	
	AM		.025 Wall Copper Enhanced Surface
	AL		.025 Wall 90-10 Cupro-Nickel Enhanced Surface
	AE		.035 Wall 90-10 Cupro-Nickel Enhanced Surface
26 - 27		Absorber Tubes	
	BE		.022 Wall 95-5 Cupro-Nickel Smooth Surface
	AK		.028 Wall 95-5 Cupro-Nickel Smooth Surface
	AL		.035 Wall 95-5 Cupro-Nickel Smooth Surface
	AM		.049 Wall 95-5 Cupro-Nickel Smooth Surface
	AN		.028 Wall 90-10 Cupro-Nickel Smooth Surface
	AP		.035 Wall 90-10 Cupro-Nickel Smooth Surface
	AR		.049 Wall 90-10 Cupro-Nickel Smooth Surface
	BF		.028 Wall 316L Stainless Steel Smooth Surface
	AV		.028 Wall Copper Smooth Surface
28		Pressure Vessel Construction	
	E		Standard construction (ASME Generator)
29		Generator Water Box Arrangement	
	B		1-Pass Non-Marine Right Front Flange
	C		2-Pass Non-Marine Right Front Flange
30		Condenser and Absorber Water Box Arrangement	
	G		150 PSI Marine Victaulic
	H		150 PSI Marine Right Front Flange
	J		150 PSI Non-Marine Victaulic
	K		150 PSI Non-Marine Right Front Flange
31		Evaporator Water Box Arrangement	
	C		1-Pass 150 PSI Non-Marine Victaulic
	D		1-Pass 150 PSI Non-Marine Right Front Flange
	A		2-Pass 150 PSI Non-Marine Victaulic
	B		2-Pass 150 PSI Non-Marine Right Front Flange
32		Unit Energy Valve	
	G		2-Way 3" [76 mm] 150 pound Wafer Butterfly
	H		2-Way 4" [102 mm] 150 pound Wafer Butterfly
	J		2-Way 6" [152 mm] 150 pound Wafer Butterfly
	K		2-Way 8" [203 mm] 150 pound Wafer Butterfly
	L		3-Way 3" [76 mm] 150 pound Flanged tee Wafer Butterfly
	M		3-Way 4" [102 mm] 150 pound Flanged tee Wafer Butterfly
	N		3-Way 6" [152 mm] 150 pound Flanged tee Wafer Butterfly
	P		3-Way 3" [76 mm] 300 pound Flanged tee Wafer Butterfly
	R		3-Way 4" [102 mm] 300 pound Flanged tee Wafer Butterfly
	T		3-Way 6" [152 mm] 300 pound Flanged tee Wafer Butterfly
	U		2-Way 3" [76 mm] 150 pound Flanged Butterfly
	V		2-Way 4" [102 mm] 150 pound Flanged Butterfly
	W		2-Way 6" [152 mm] 150 pound Flanged Butterfly
	Y		2-Way 8" [203 mm] 150 pound Flanged Butterfly
	A		2-Way 2" [51 mm] 150 pound Wafer V-Bal

General Information

Service Model digit / variable		Description	Selection
B			2-Way 3" [76 mm] 150 pound Wafer V-Ball
	C		2-Way 4"" [102 mm] 150 pound Wafer V-Ball
	D		2-Way 2" [51 mm] 300 pound Wafer V-Ball
	E		2-Way 3" [76 mm] 300 pound Wafer V-Ball
	F		2-Way 4"" [102 mm] 300 pound Wafer V-Ball
	Z		2-Way 2" [51 mm] 150 pound Flanged V-Ball
	1		2-Way 3" [76 mm] 150 pound Flanged V-Ball
	2		2-Way 4" [102 mm] 150 pound Flanged V-Ball
33		Electrical Protection Package	
	D		Standard Electrical Package
34		Control Panel Power Connection	
	A		Circuit Breaker
	B		Fused Disconnect Switch
	C		Non-Fused Disconnect Switch
	D		Terminal Block
35		Local Clear Language Display	
	A		Clear Language Display - Complex Character
	B		Clear Language Display - Suitable for Outdoor Use
36	X	Not Applicable	
37		Tracer Interface Control Module	
	A		Tracer 100 Interface Module (com3)
	B		Tracer Summit Interface Module (com4)
38		Printer Interface Control Module	
	A		Printer Interface Module
39		Ambient Chilled Water Reset	
	A		Ambient Chilled Water Reset
40		Under/over Phase Voltage Protection	
	A		Under/over Voltage Protection
41		Chiller/tower Water Flow Display	
	A		Differential Water Pressure Transducers
42		Options Control Module	
	A		Options Module
43	X	Not Applicable	
44		Unit Insulation	
	C		Cold Unit Insulation Only
45		Lithium Bromide Filter	
	A		Lithium Bromide Filter
46		Unit Special Features	
	X	Not Applicable	
	S		Special
47	X	Not Applicable	
48		Purge System	
	1		Automatic Purge System
	2		Manual Purge System
49		Adjustable frequency drive	
	1		Frequency Drive

General Information

⚠ WARNING

⚠ CAUTION

Warnings and cautions appear at appropriate intervals throughout this manual. Warnings are provided to alert installing contractors to potential hazards that could result in personal injury or death. Cautions are used to alert personnel to conditions that may result in minor or moderate injury or equipment damage.

IMPORTANT
Operation without proper water pump and flow sensing interlocking will void unit warranty.

Note: This machine uses lithium bromide inhibited with lithium molybdate and lithium hydroxide. Lithium bromide that contains other inhibitors cannot be used in this equipment.

To avoid risk of injury never climb over a machine or step on components. Always use a platform, ladder or similar.

To avoid risk of injury always use a crane or hoist to lift or move machine components.

Lift locations are marked.

Safety Precautions

⚠ WARNING

HAZARDOUS VOLTAGE!

DISCONNECT ALL ELECTRIC POWER INCLUDING REMOTE DISCONNECTS BEFORE SERVICING.

FAILURE TO DISCONNECT POWER BEFORE SERVICING CAN CAUSE SEVERE PERSONAL INJURY OR DEATH.

⚠ WARNING

HAZARDOUS VOLTAGE!

DO NOT USE WATER ON A MOTOR OR ELECTRICAL FIRE. USE CO^2 (CARBON DIOXIDE) OR ANSAL (DRY CHEMICAL) (CLASS ABC OR BC).

USE OF WATER ON AN ELECTRICAL FIRE MAY RESULT IN SERIOUS PERSONAL INJURY OR DEATH CAUSED BY ELECTRICAL SHOCK.

⚠ CAUTION

ELECTRICAL COMPONENTS!

KEEP PAINT AWAY FROM ALL ELECTRICAL COMPONENTS AND NEVER PAINT WHILE THE MACHINE IS ENERGIZED.

FUMES MAY BE PRESENT CAUSING EXPLOSIVE CONDITIONS.

⚠ CAUTION

LITHIUM BROMIDE!

LITHIUM BROMIDE IS NORMALLY NONTOXIC; HOWEVER, OTHER CHEMICALS MIXED WITH THE SOLUTION CAN CAUSE IRRITATION AND ADDITIVE VAPORS CAN CAUSE NAUSEA. ALWAYS PROVIDE VENTILATION TO REMOVE ACCUMULATED VAPORS.

IN CASE OF ACCIDENTAL CONTACT WITH THE SOLUTION, WASH THE AFFECTED AREA WITH WATER IMMEDIATELY.

⚠ CAUTION

SOLUTION VAPOR AND CONDENSATE PIPES!

SOLUTION VAPOR AND CONDENSATE PIPES CONNECTED TO THE GENERATOR SECTIONS OF THE MACHINE HAVE SURFACE TEMPERATURES AS HIGH AS 300°F [149°C].

AVOID CONTACT WITH THESE AREAS WHILE THE MACHINE IS IN SERVICE TO PREVENT PERSONAL INJURY IN THE FORM OF SEVERE BURNS.

Sequence of Operation

To understand the Horizon chiller operation, a thorough understanding of the various aspects of the machine are required. This section of the manual, therefore, explains the lithium bromide cycle, the controls utilized to control the lithium bromide cycle, and the sequence of operation of the cycle and associated controls.

Machine Solution Cycle

The machine solution cycle is discussed in this section. Refer to the cooling cycle schematic, Figure 3, during the cycle explanation and reference Table 1.

Figure 3 – Single-Stage Absorption Refrigeration Cycle

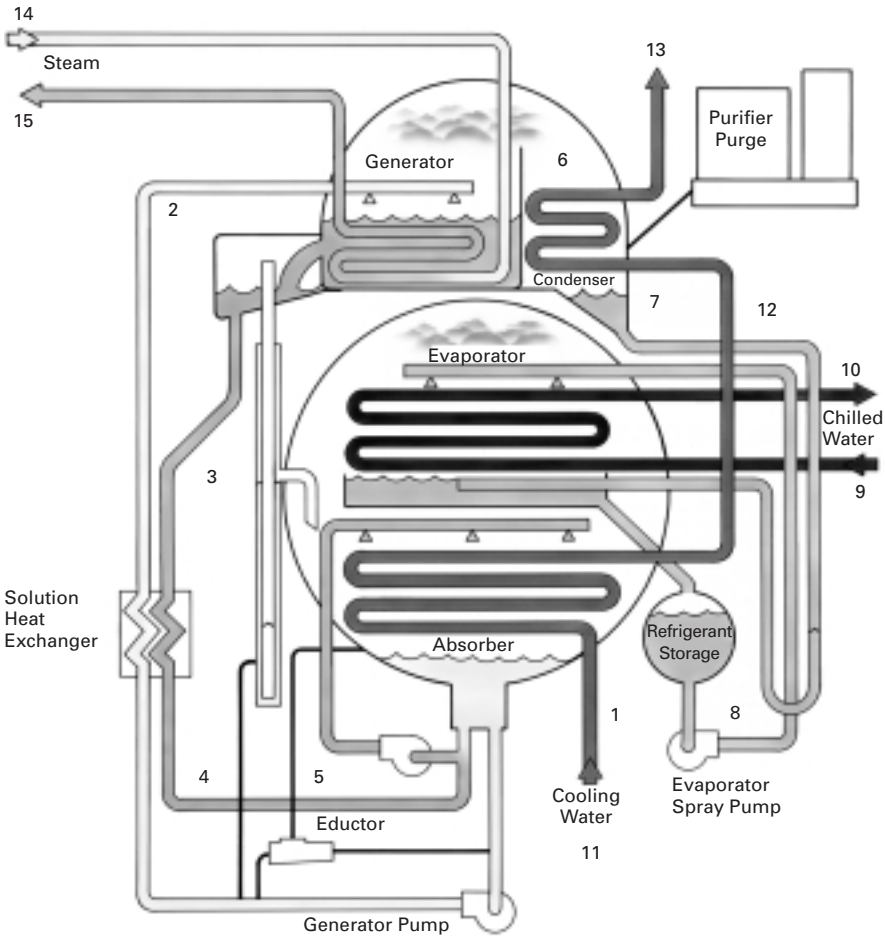

Table 1 – Machine Cooling Cycle (Reference Figure 3) (Typical Temperatures)

Point	LiBr Solution or Refrigerant Water	Concentration %	Temperature (°F)	Temperature (°C)
1	Absorber Dilute Solution	60.8	107	42
2	Absorber Dilute Solution Entering the Low Temperature Generator	60.8	185	85
3	Solution Leaving the Low Temperature Generator	64.4	216	102
4	Solution Entering Absorber Sump/Spray Pump	64.4	129	54
5	Absorber Spray Solution (Mixed with absorber dilute)	63.1	121	49
6	Low Temperature Generator Refrigerant Vapor	NA	208	98
7	Condensed Refrigerant	NA	110	43
8	Evaporator Pump Refrigerant	NA	41	5
9	System Chilled Water/Entering	NA	54	12
10	System Chilled Water/Leaving	NA	44	7
11	Absorber Cooling Water	NA	85	29
12	Absorber Leaving/Condenser Entering Cooling Water	NA	94	34
13	Condenser Leaving Cooling Water	NA	101.6	38.6
14a	Steam Entering Unit @12 psig @ Sea Level	NA	244	118
14b	Hot Water Entering Unit @270°F [132°C] (option)	NA	270	132
15a	Condensate Leaving Generator	NA	244	118
15b	Hot Water Leaving Generator (option)	NA	222	106

Sequence of Operation

Refrigerant Cycle (Reference Figure 3)

Refrigeration Cycle
This is an example of typical machine operation at a standard rating point condition (that is, 85°F [29°C] tower, 44°F [6.7°C] leaving chilled water) at full load. Dilute solution has a relatively high refrigerant content and low lithium bromide content. An intermediate solution is a mixture of dilute and concentrated solutions. A concentrated solution is one with a relatively low refrigerant content and high lithium bromide content.

Generator
Dilute solution (1) is pumped into the generator (2) where it is boiled by the steam or hot water in the tube bundle, creating refrigerant vapor. The refrigerant vapor is drawn to the condenser (6). The now concentrated solution flows by gravity through the solution heat exchanger (3) to the absorber (4) spray system where it is mixed with dilute solution (1) from the absorber and sprayed on the absorber tubes (5).

Condenser
Refrigerant vapor (produced by the low temperature generator) enters the condenser (6) to be reduced in pressure/temperature via expansion device for delivery to the evaporator. The heat of condensation is rejected to the cooling water inside the tube bundle (12-13).

Evaporator
System water runs through the tube bundle (9-10) where its heat is transferred to the sprayed refrigerant water (8) causing the refrigerant to vaporize/boil. The refrigerant vapor is drawn to the slightly lower pressure in the absorber.

Absorber
Refrigerant vapor is absorbed by the lithium bromide solution (dilute) to be circulated and cycled again. The solution is pumped through the solution heat exchanger to the generator. Absorber Heat (acquired in the evaporator) is rejected via the cooling water inside the tube bundle (11-12).

Absorption Process
Solution (concentrated) enters the spray system from the generator and enters the spray system wetting the tubes and providing a liquid surface for the refrigerant vapor from the evaporator to absorb into the lithium bromide solution. The solution temperature/concentration sprayed in the absorber controls the absorber pressure thereby controlling the evaporator refrigerant temperature.

Solution Heat Exchanger
Solution flows through the heat exchanger being preheated reducing the heat energy required to induce boiling within the generator and to decreasing the temperature of the solution being returned to the absorber, thus decreasing the load on the cooling tower.

Sequence of Operation

Control Panel Location and Internal Hardware

Component Description

The main control panel (Figure 4) has two sections. The left side (control side) includes clear language display (mounted through door), chiller, circuit, purge, stepper, and optional communications modules, a terminal block, and a 115 Vac-control voltage to 24 Vac transformer. The right side (power side) consists of a main line voltage terminal block or disconnect service for line power connections, line voltage to control voltage transformer, relays, transformers, starter module and purge module. Line voltage is restricted to the right-hand side.

Figure 4 – Machine Control Panel

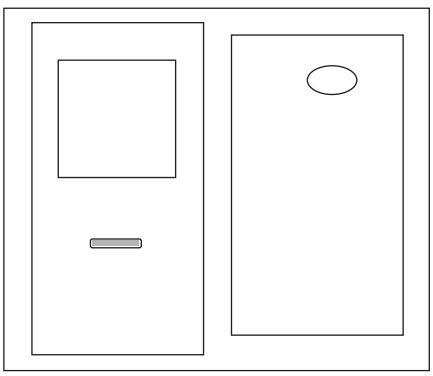

The components within the control panel are illustrated in Figure 5. Modules are stacked and located top, bottom or middle configuration.

Voltages in Panels

Voltages present within the unit control panel include:

- Three phase line voltage (power side only)
- 115 Vac control circuits
- 24 Vac module power supply

Low voltage, low power (30 Vdc or less – Class II) circuit connection points are located on the left side of modules. High voltage, high power (greater than 30 Vdc – Class I) circuit connection points are located on the right side of modules. All 115 Vac circuits are Class 1.

The stepper drive uses less than 30 Vdc however, the output signals are Class 1 due to its output current (amps).

Class 1 and Class 2 wiring must not be routed together without shielding.

Sequence of Operation

Figure 5 – Panel Layout

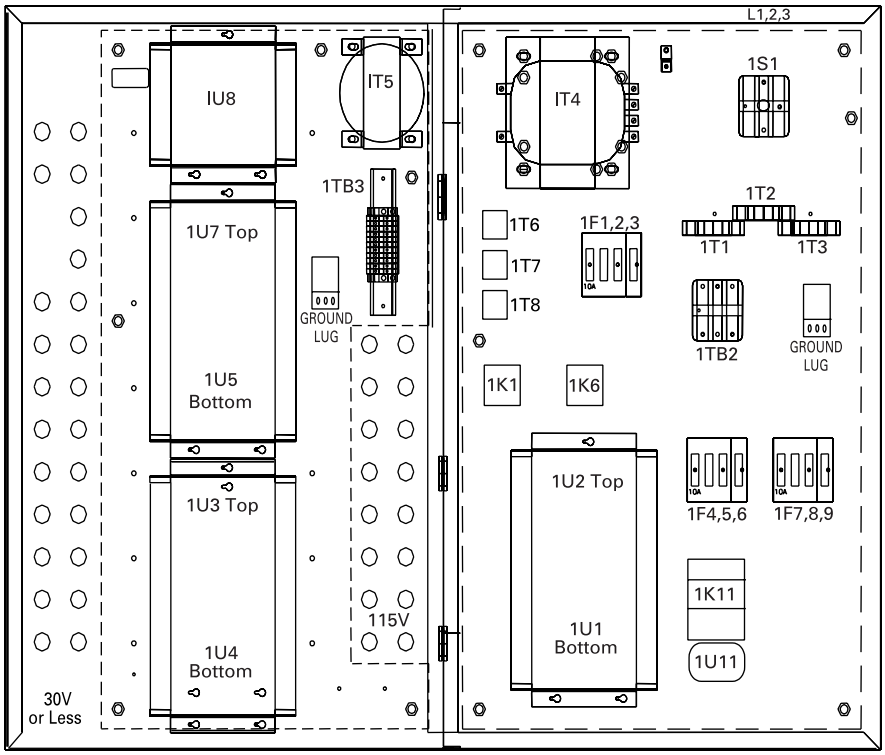

Panel Layout Legend

1U1 - Starter Module
1U2 - Circuit Module
1U3 - Chiller Module
1U4 - Purge Module
1U5 - Stepper Module
1U7 - Options Module*
1U8 - Tracer Communication Module*
1T1-2-3 - Phase Current Transformer
1T4 - Line Voltage Transformer
1T5 - Control Voltage Transformer
1T6-7-8 - Under-Over Phase Voltage Transformers*
L1-2-3 - Main Power Entrance
1TB2 - Pump Motor Terminal Block
1TB3 - UCP2 Control Panel Mounted Terminal Strip
1S1 - Line Voltage Fused Disconnect Switch*
1K1 - Refrigerant Pump Abnormal Relay
1K6 - Purge Relay
1K11 - Refrigerant Pump Contactor
1U11 - Refrigerant Pump Overload
1F1, F2 - Line Voltage Transformer Fuses
1F3 - Phase Voltage Transformer Fuse*
1F4, F5, F6 - Refrigerant Pump and Absorber Solution Pump Motor Fuses
1F7, F8, F9 - Low Temperature Solution Pump Motor Fuses

*Optional

Sequence of Operation

Signal Block Diagram
The following signal block diagram illustrates the interrelationship of the interprocessor communications (IPC) link that allows the various module microprocessors to communicate. All control modules are mounted in the chiller control panel. The option and communication modules are present only when specified. The Trane Tracer Automation System provides communications outside the unit control panel.

The **Chiller Module** (1U3) serves as the master control. This module is responsible for implementing the algorithms that control chiller operation. It manages the functions of machine safety, operating limits, chilled water temperature control by monitoring unit mounted sensors and information from other modules on the interprocessor communications (IPC) link.

The chiller module initiates and controls all data communications. Internal control algorithms and external input data are used to produce chilled water temperature while maintaining safe reliable chiller operation. The input/output ports on the chiller module monitor and control-chilled water and cooling water pump operation. The evaporator and condenser water pumps are electrically controlled and interlocked to the unit control panel. This interlocking arrangement provides protection from improper system water pump control or loss of flow conditions, which can damage the machine.

This module communicates through the interprocessor communications connection to other modules such as: the stepper drive module to control the energy input, the starter module to start/stop the solution pumps and control solution flow, and to the operator interface to display machine status information to the operator.

Figure 6

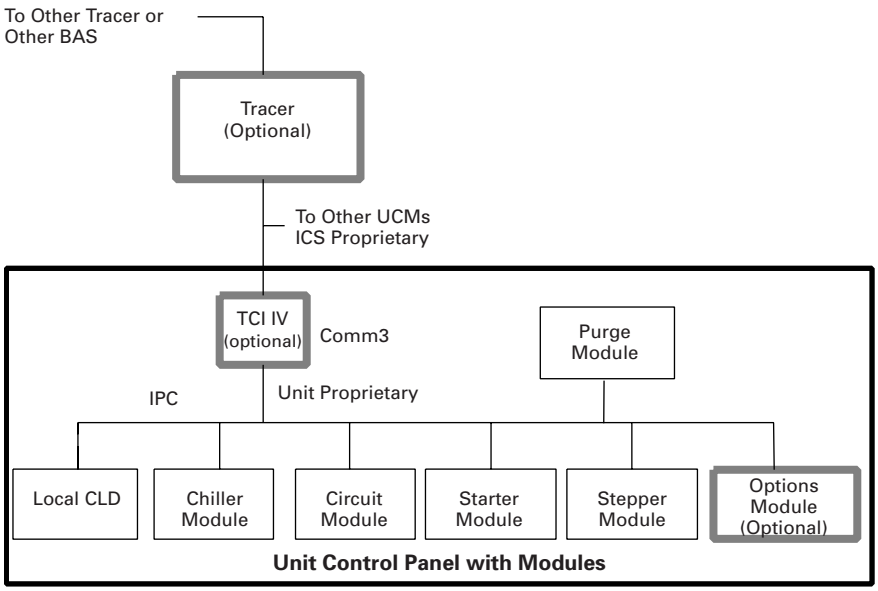

Set point Communication and Storage
The machine setup information selected at the operator interface is stored in the chiller modules non-volatile memory that is retained when the panel is not powered. The chiller module is responsible for verifying that the setup memory is not corrupted, and for substituting default settings if the stored settings become corrupted.

1U1 Starter Module
The starter module controls external water pump operation and provides an interface to an adjustable frequency variable speed drive for solution pump control.

1U2-Circuit Module
The circuit module is located in the lower portion of the control section beneath the starter module. The main purpose of the circuit module is that of an input/output (I/O) expander for the chiller module. The circuit module provides input data from unit temperature sensors, unit pressure and switch inputs, and makes this information available by way of an interprocessor communication link. This module provides output contact closures for control of the purge and lithium bromide concentration sensing, detection, and recovery control.

Sequence of Operation

1U4 Purge Module
The purge module provides automatic purge pumpout logic. A sensor located on the purge condensing unit suction line is monitored to determine when pumpout is required. An output then turns on the pumpout cycle. The pumpout period duration is monitored and stored for analysis.

1U5 Stepper Module
Stepper module 1U5 collects input from unit sensors and binary input devices. The stepper output is used for control of the energy valve.

1U6 Local Clear Language Display (LCLD, or Operator Interface) (standard)
The LCLD is located on the control side door. The module connecting wiring is accessible on the door backside. This module accepts operator keypad input and communicates with the other control elements within the control panel. See operator interface for complete details.

1U7 Options Module (optional)
Present only when optional features are specified that required additional input or outputs (I/O).

1U8 Tracer Communications
Interface Module (optional)
Required for Tracer communications.

Terminal Blocks
Terminal blocks are used for various connection points within the control panel as identified below.
- 1TB1 Main terminal block (standard).
- 1TB2 Pump Motor Terminal Block – Line voltage distribution point for the three phase motors.
- 1TB3 Control Panel Mounted Terminal Strip-Provides termination points for internal wiring, and for field wiring interface points. See the electrical connection's points on the typical unit schematics.

Main Power Termination Point
The connection point in the power section used for customer three phase power.
- 1TB1 Main terminal block (standard).
- 1S1 Line voltage non-fused disconnect switch-optional.
- Circuit breaker, or shunt trip circuit breaker - optional.

Circuit Breakers and Fuses
Circuit breakers and fuses that provide the branch circuit protection.
- 1CB2 Line voltage transformer circuit breaker.
- Circuit breaker provides branch circuit protection to 1T5 primary winding.
- 1F1, 1F2 Line voltage transformer fuses.
- 1F3 Phase voltage transformer fuse.
- 1F4 ,1F5, 1F6 Refrigerant and absorber solution pump motor fuses.
- 1F7, 1F8, 1F9 Low temperature solution pump motor fuses.

Relays
The following relays are used to isolate 115 volt signals from low voltage module input signals.
- 1K1 - Refrigerant pump abnormal relay
- 1K6 - Vacuum pump relay

Sequence of Operation

Transformers
Transformers are used to reduce voltage to required levels. Some are used to distribute power and others for module input signals. The various transformers are identified below.

1T1, 1T2, 1T3 Phase Current Transformers
Current transformers are used to sense the total 3 phase line current draw. The output of each current transformer is input to the 1U1 starter module. Current transformers are polarity sensitive. Typically there is a marking "dot" on one side and the secondary wires are black and white. The installation of the transformers must be with the markings all facing the same direction regarding the current flow through the primary wiring. The current transformer outputs are input to the starter module and displayed at the LCLD with in the Purge/Pump Report.

1T4 Line Voltage Transformer
Transformer that steps down line voltage to 115 Vac control powered circuits.

1T5 - Control Voltage Transformer
Transformer that steps down the 115 Vac control voltage to 24 Vac power.
1T6, 1T7, 1T8 Under-Over Phase Voltage Transformer (Optional)
Voltage potential transformers provide an isolated secondary voltage that is a proportional representation of the primary voltage. Each line voltage of the three phase supply to the unit control panel is sensed. Each potential transformer's low voltage output is input to the 1U5 starter module.

Control System Features and Functions
- Operator interface with a 40 character, 2-line display and a 16 key keypad.
- The microprocessor automatically dilutes the lithium bromide solution, before shutting down the machine.
- Chilled water pump control output contacts.
- Absorber/Condenser pump control output contacts.
- Automatic and manual control of solution and refrigerant pumps.
- Adjustable frequency drive for solution flow control of the low temp solution pump and absorber spray pump.
- Automatic and manual purge system incorporating the Trane Purifier Purge™.
- Dilution control Refrigerant Dump Valve provides refrigerant where it's needed to properly reduce solution concentration during a dilution cycle or loss of power.
- If an extended loss of power occurred while running, a dilution cycle will be initiated when the power is restored. This dilution cycle will attempt to reduce the solution concentration to prevent crystallization.

Additional System Protection:
- Under/over voltage detection (optional)
- Chilled water flow confirmation input
- Condenser water flow confirmation input
- Emergency stop shutdown input

Sequence of Operation

Control Locations

Machine controls are factory mounted and wired. External controls are connected with field wiring, and are controlled by the chiller or used by the chiller system.

Figure 7 – Machine Sensor Locations

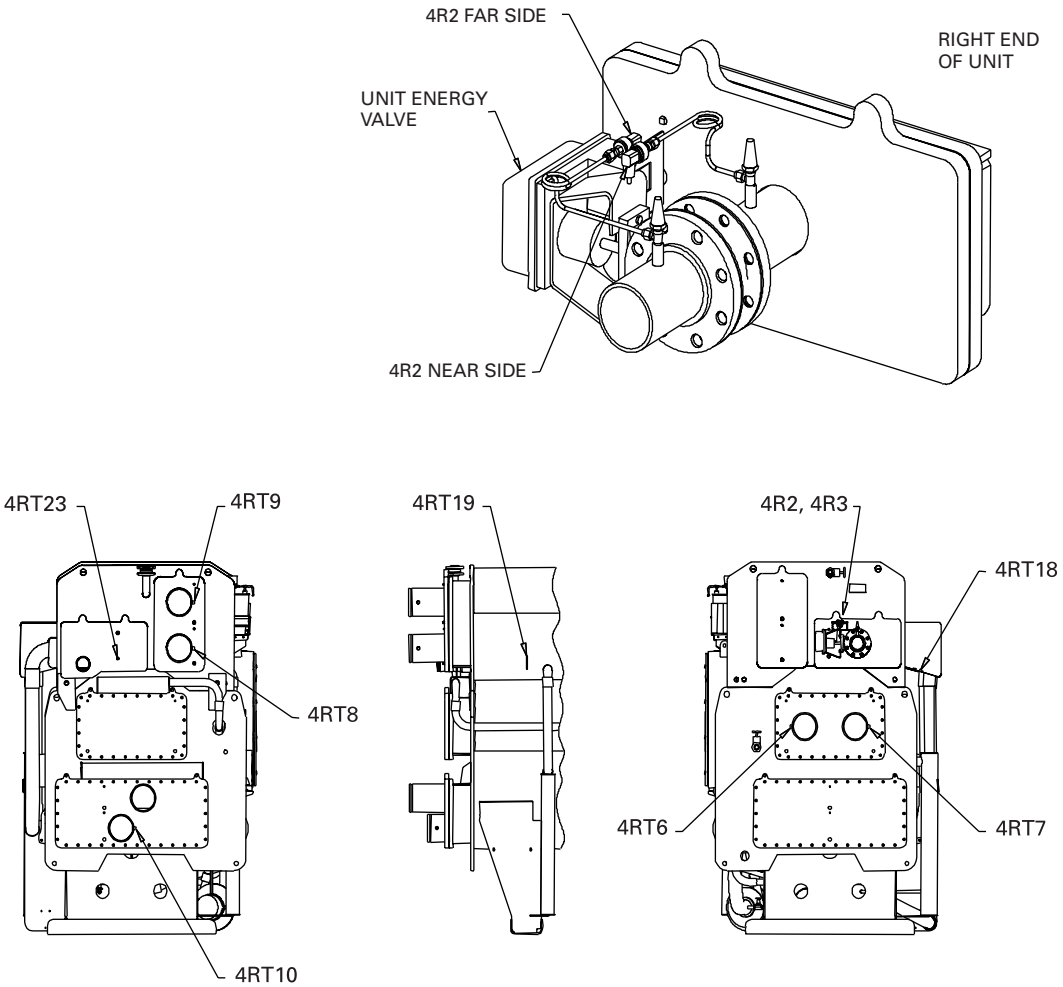

Sequence of Operation

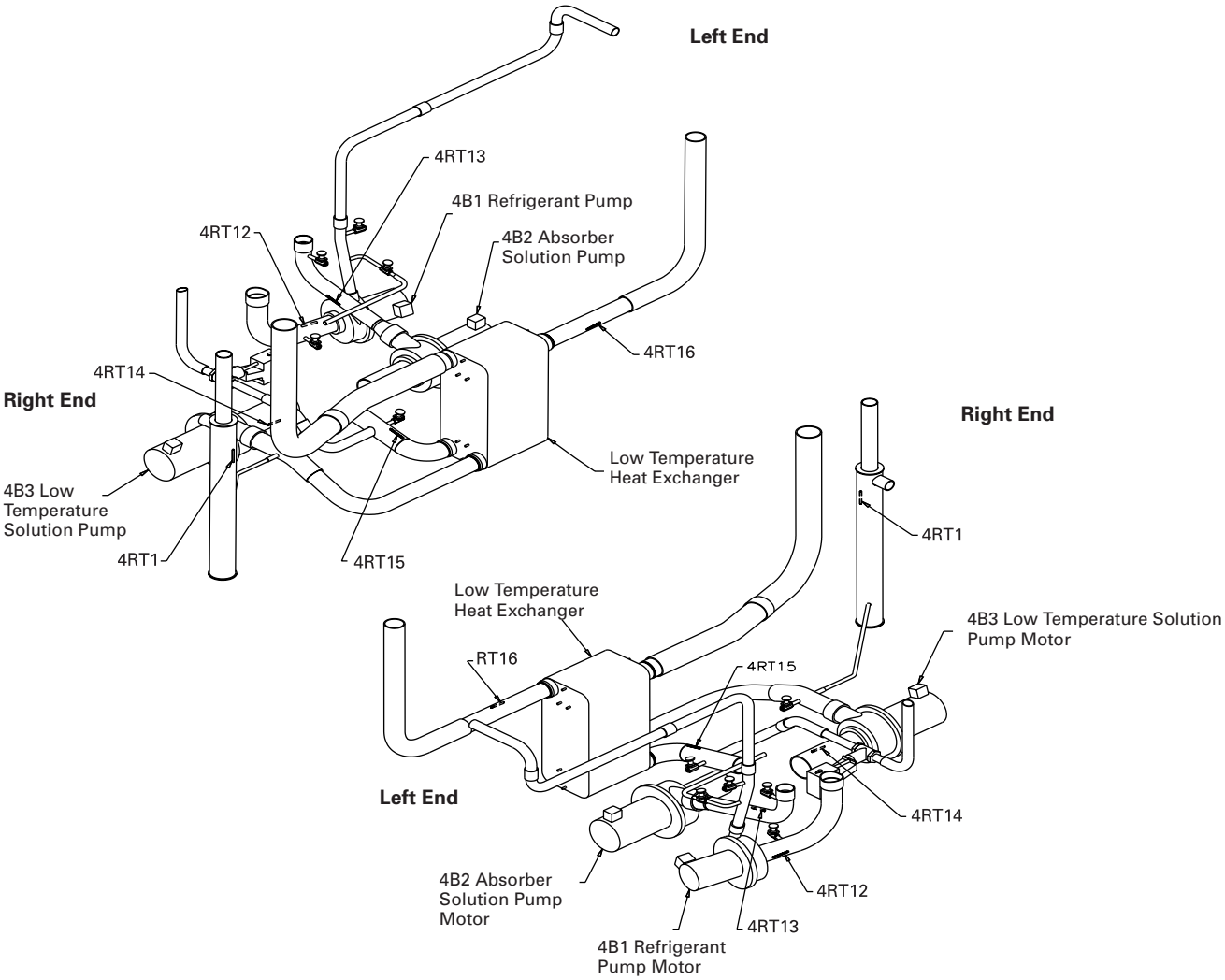

Table 2

Name	Sensor Application	Type
4R2	Supply Steam Pressure Transducer	Transducer
4R3	Generator Steam Pressure Transducer	
4RT1	Sensing Detection and Recovery Temperature Sensor	Thermistor
4RT6	Evaporator Entering Water Temperature Sensor	
4RT7	Evaporator Leaving Water Temperature Sensor	
4RT8	Absorber Leaving Water Temperature Sensor	
4RT9	Condenser Leaving Water Temperature Sensor	
4RT10	Absorber Entering Water Temperature Sensor	
4RT12	Saturated Evaporator Refrigerant Sensor	
4RT13	Absorber Spray Temperature Sensor	
4RT14	Solution Temperature Leaving Absorber Sensor	
4RT15	Solution Temperature Entering Absorber Sensor	
4RT16	Solution Temperature Entering Low Temperature Generator Sensor	
4RT18	Solution Temperature Leaving Low Temperature Generator Sensor	
4RT19	Saturated Condenser Refrigerant Temperature Sensor	
4RT22	Hot Water Temperature Entering Low Temperature Generator Sensor	
4RT23	Steam Condensate or Hot Water Temperature Leaving Low Temperature Generator Sensor	

Sequence of Operation

Machine Control

This section identifies sequence of operation and control strategy, machine control panel details and specific machine mounted controls.

The illustration represents time and event proceeding from left to right. The operator interface displays, time and the events in the sequence that they occur. Follow the sequence to understand when external and internal control devices are used. The time line provides information that may not be obvious when watching the display. Additionally, this information can be used for trouble shooting purposes.

The sequence of operation illustrates time and events that occur at initial power-up, during start-up when auto is selected, auto off cycle operation, or manual stop operation. The time line 1 and 2 in Figure 8 and time line 3 (Figure 8 continued) pictorially illustrates the events that occur during normal operation.

Sequence of Operation Time Line Referenced Notes

1. See "Operator Guide" for a listing of valid modes that may occur during "Unit is Running."
2. Upon power up, refrigerant dilution valve 1 (4B6) remains off for thirty seconds.
3. When a "need to cool" exists, an incomplete dilution cycle can be exited by pressing the Auto key. The chiller will continue with a new start-up sequence.
4. The "Auto, waiting for a need to cool" can be exited by pressing Stop.
5. Power loss at this point will result in a dilution cycle upon re-establishing power, if there is no need to cool.
6. Power loss at this point will result in the remainder of a dilution cycle being completed upon re-establishing power.
7. Chilled water pump will be stopped after the dilution cycle is completed for all MAR and MMR except in the case of chilled water pump flow overdue where the chilled water pump signal remains on.
8. Panic stop; operator presses the stop key twice within 5 seconds. This state may be exited by pressing either the stop or auto key.

Machine Start-up

During the machine start sequence the chiller relies on external devices to provide correct feedback specifically, the chilled water pump starter and flow switch confirmation, condenser water pump starter and flow switch confirmation. During machine start-up, the appropriate message will be displayed that confirm the sequences occurred.

The Unit Control Panel (UCP) waits up to four minutes and fifteen seconds for proof of chilled water flow after a water pump start command output is given.

Failure to receive *chilled water flow* within the allotted time confirmation results in a message stating "Diagnostics -auto." This is a Machine shutdown Auto Restart (MAR)- diagnostic where the chiller will start once the chilled water flow switch logic is satisfied.

Failure to receive *condenser water flow* within the time periods' results in an Machine shutdown Manual Restart (MMR)- diagnostic where the chiller must be reset before continued operation is allowed.

Dilution Cycle

A 3 to 15 minute dilution cycle is performed on all shutdown modes with one exception. The exception is a "Panic Stop" that consists of an operator depressing the stop key twice (or continuously) within a 5-second period. This will execute a pump stop command and all pumps will stop without the normal dilution cycle. A restart can be initiated at anytime by pressing the auto key. A dilution cycle may be entered by pressing the stop key. If "Stop" is selected, the events following a stop command is pictorially illustrated in the bottom half of Figure 8 (continued).

Sequence of Operation

Figure 8 – Sequence of Events from a Stop or Auto Condition through Start

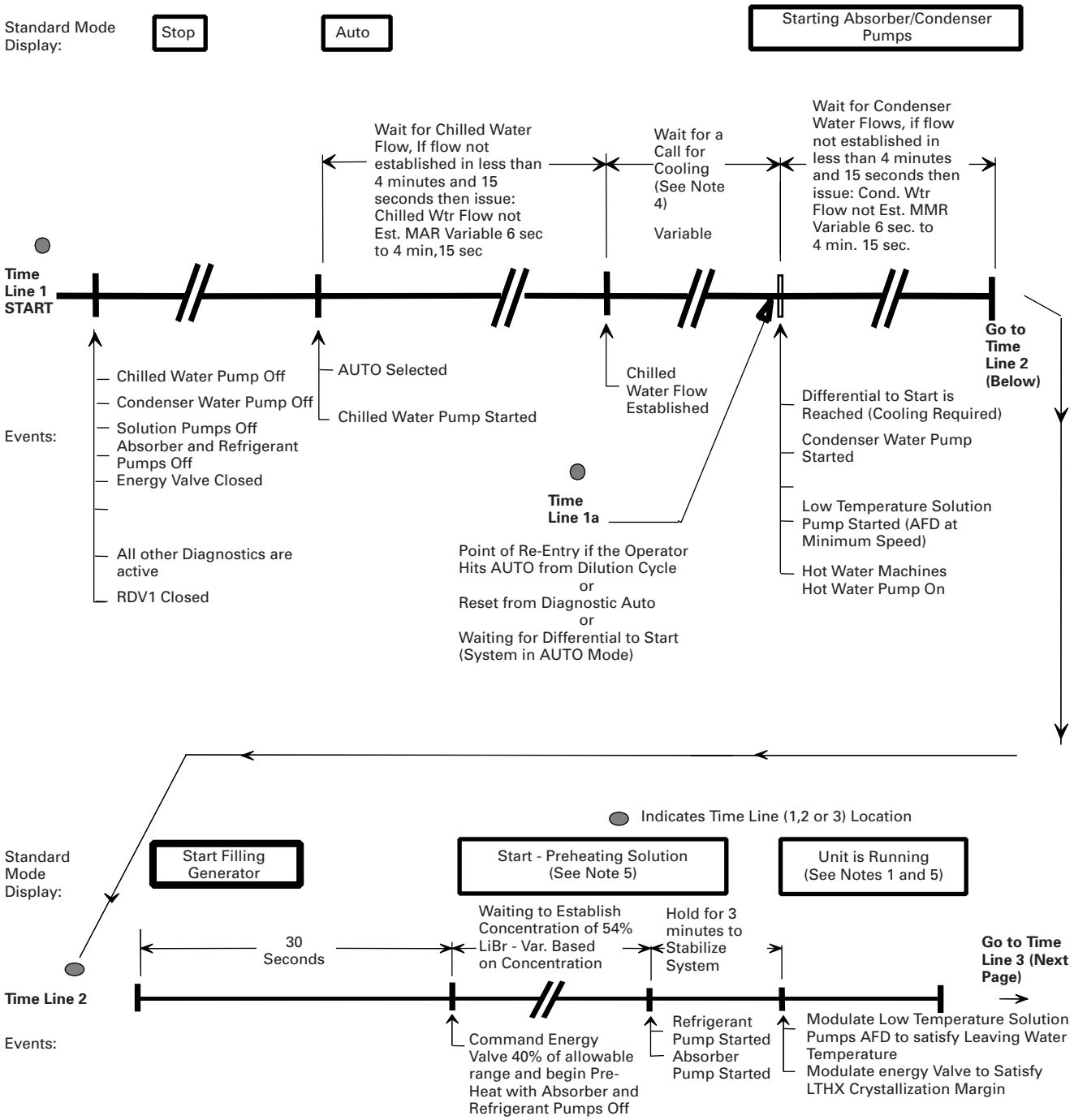

Sequence of Operation

Figure 8 (Continued) – Sequence of Events: From Running through Dilution Cycle

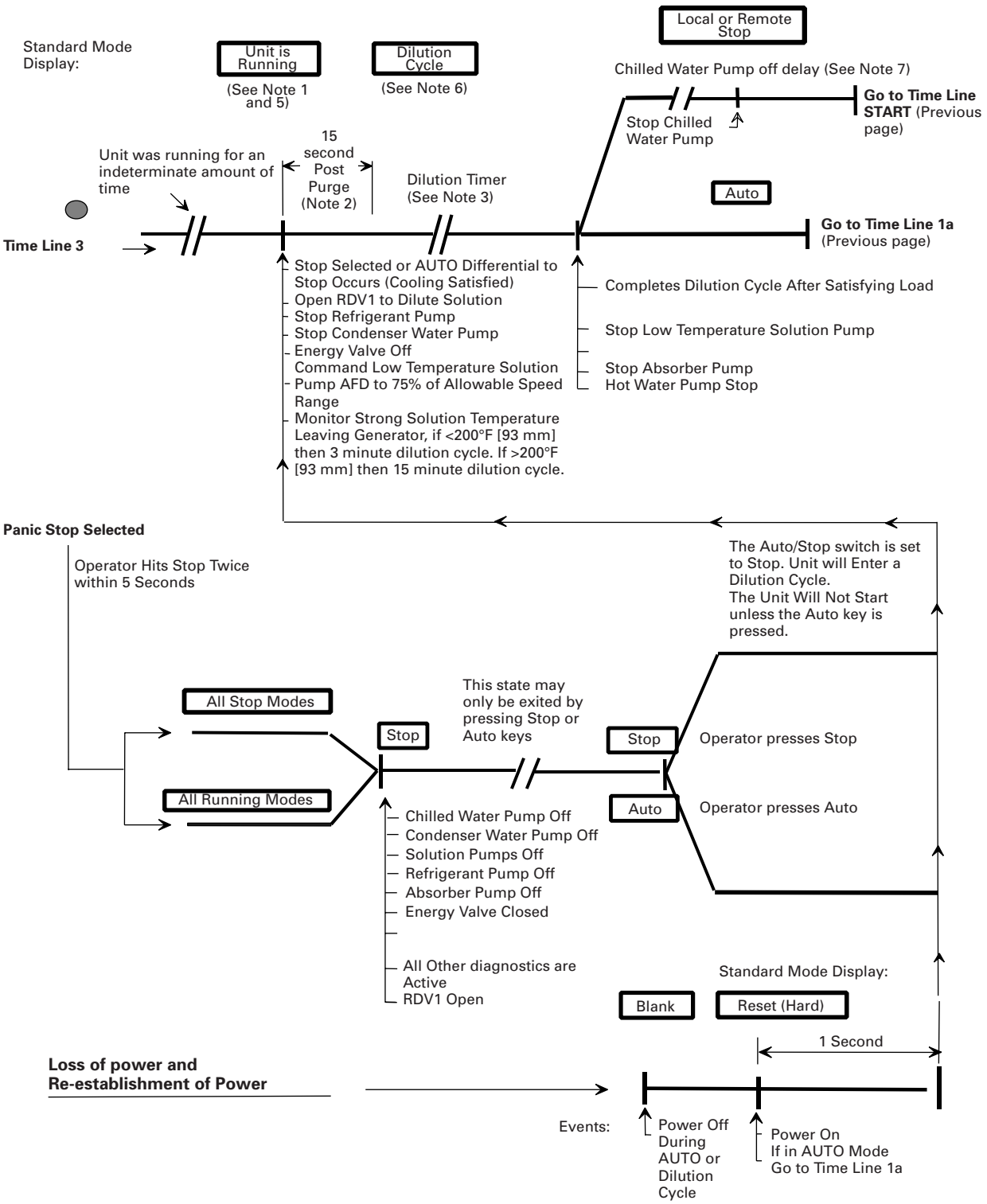

Sequence of Operation

Machine Control Strategy

The objective of the unit control system is to reliably achieve and maintain leaving chilled water Set point. The unit control panel (UCP) monitors chilled water temperature and its relation to the panel set point, and adjusts the amount of solution supplied to the generator, and the energy applied as needed. Adjusting the solution flow maintains the leaving water temperature. Adjusting the energy input maintains solution concentration. These two adjustments are the two primary control algorithms employed in the UCP. Reference Figure 9.

1. Leaving Water Temperature *(LWT)*
The unit control panel compares leaving chilled water temperature to the leaving water set point and adjusts the refrigerant vapor pressure in the evaporator to achieve control. The refrigerant vapor pressure is determined by the absorber spray concentration. The absorber spray concentration is changed by adjusting the generator solution flow with the adjustable frequency drive (AFD) control of the absorber spray and low temperature solution pumps.

Absorber spray solution concentration determines the absorber vapor pressure that controls the refrigerant vapor pressure and temperature. The refrigerant. spray temperature then controls the LWT to the leaving water temperature Set point.

2. Concentration Control
Solution concentration control adjusts the generator energy input to hold solution concentration to optimum efficiency. The strong solution concentration is typically maintained 15°F [-9.4°C] from theoretical crystallization point. This is called the low temperature heat exchanger (LTHX) temperature margin. As strong solution concentration is varied by LWT solution flow control, the theoretical crystallization temperature is changed. The control system adjusts the energy input to maintain the LTHX temperature margin throughout the load range. The simplified control illustration below illustrates the two control inputs and indicates that these inputs must pass through the "limit control" before the signals are output the solution pump AFD and/or energy input control.

Along with the microprocessor control of LWT and concentration control as stated previously, the microprocessor monitors operating conditions that could alter machine operation. If such a condition is detected the limit control system will override LWT and concentration control requests. The override limit occurs when a control output (from LWT or concentration control) request is greater than allowed by the particular limit schedule. The limit control modifies machine control to continue operation.

When a limit or safety takes priority control, the clear language display will so indicate the active limit mode. A limit mode does not necessarily mean that a problem exists. In many cases this limit is a normal function such as soft load during start-up.

Figure 9 – Simplified Diagram of LWT Control and Concentration Control

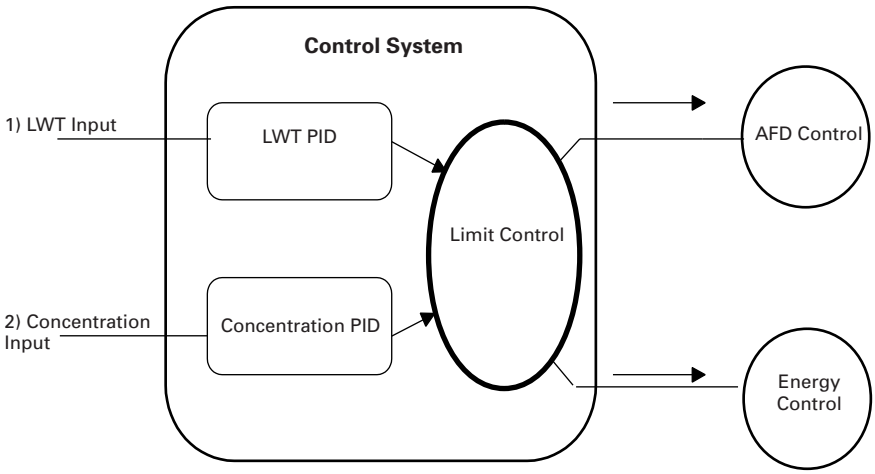

Sequence of Operation

The microprocessor will shut down the chiller if a safety set point is violated.

Figure 10 illustrates the limits that can override LWT and concentration control. The primary control signal can be modified by any limit.

Soft Loading
Soft loading is accomplished via a filtered Set point change function in that it affects the speed that the machine loads or unloads when given a new set point target. This occurs at start-up and whenever the chilled water Set point is changed. On start-up, this allows the machine to warm-up gradually, and allows for the tower water to warm-up. Soft loading is also active when a chilled water Set point change is received. The new Set point will be reached as the new target Set point at the end of the set soft loading time period. The soft loading time period is factory set to 15 minutes and can be set from 1 to 100 by the start-up personnel.

Low Condensing Temperature Limit
Low temperature may limit solution flow to prevent salt carryover and/or crystallization. The factory default setting is designed to provide reliable chiller operation with low tower temperatures. To do this the solution flow may need to be limited at condensing temperatures below design. The further below design and the higher the load will increase the likelihood of this limit mode becoming active.

Low Refrigerant Temperature Limit and Cutout
This limit prevents the machine from driving down the refrigerant temperature below safe and reliable temperatures. If an unsafe level is approached the control strategy will first limit loading, then enter a hold where continued loading is not allowed. If the refrigerant temperature continues to fall, the unit will unload in an attempt to keep the chiller on line avoiding a low temperature trip.

If the refrigerant temperature continues to decrease and the cutout is reached then an MMR will occur requiring manual reset. For example, with a typical low refrigerant temperature set point of 36°F [2.2°C] the following will be active points; limit loading will begin with a decreasing refrigerant temperature reaching 38.5°F [3.6°C], hold loading will occur @ 38°F [3.3°C], and unload will occur at 37.5°F [3.1°C]. Cutout will occur @ 36°F [2.2°C] resulting in a machine shutdown manual reset- MMR- diagnostic. The factory default setting is 36°F [2.2°C] and can be adjusted, if required by Trane service personnel.

Low Chilled Water Temperature Limit
Low chilled water temperature limit operates similarly to the low refrigerant temperature limit previously discussed. For example, with a typical low chilled water temperature Set point of 38°F [3.3°C], limited loading begins @ 40.5°F [4.7°C], hold loading @ 40°F [4.4°C], unload at 39.5°F [4.2°C], and trip @ 38°F [3.3°C] resulting in a machine shutdown manual reset- MMR- diagnostic. The factory default setting is 38°F [3.3°C] and can be adjusted, if required by Trane service personnel. The minimum difference between these limits is 2°F or 1°C.

Figure 10 – Limit Conditions that could Override LWT and Concentration Control

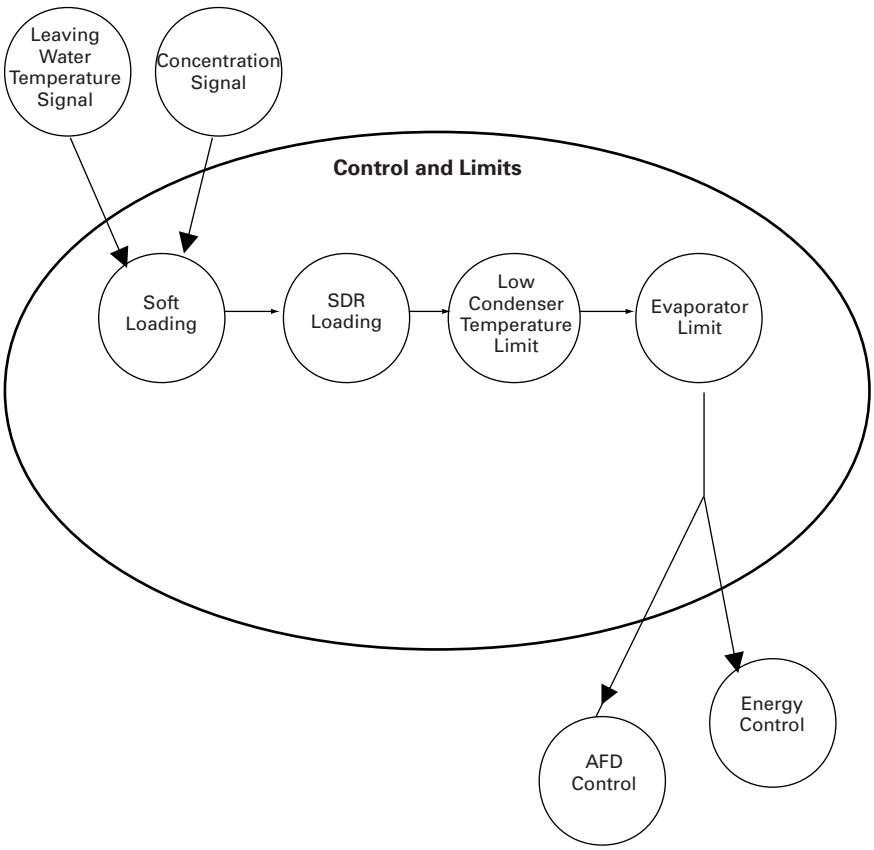

Sequence of Operation

Sensing Detection and Recovery (SDR)
Solution flow sensing provides the input information for proper solution flow detection. This is a back up system providing a second line of defense if concentration control fails to maintain the set margin of degrees away from the crystallization point. If an incorrect flow pattern is detected the control system enters a recovery mode of operation that cycles the solution pumps and refrigerant dump valve to dilute the strong solution, reestablishing the correct flow pattern. The control system will, on the first and second occurrence, increase the set concentration margin by 5°F [-15°C] in an attempt to prevent a reoccurrence, and an informational warning message will be displayed on the clear language display. Upon the third occurrence a machine shutdown manual reset (MMR) diagnostic will be set and require manual reset after corrective action is established.

Steam Input Flow Control
Steady steam input flow is important to maintain stable concentration control. The control rate at which steam enters the unit is a function of: A) supply pressure, B) saturation pressure in the generator, and, C) the steam valve position. With steady steam supply pressure the flow can be controlled quite well with the valve position alone. However, in cases where building steam supply pressure variations do occur various flow rates would occur. The control system would sense this via the absorption fluid pressures and temperature, and then make adjustments as necessary.

Today's Steam Input Flow Control incorporated in our ABSD and ABTF chillers utilizes steam pressure transducers to measure the pressures to the valve and at the machine. This information is then utilized to calculate steam flow to determine the proper valve position during these undesired pressure changes. The energy valve has a stepper control motor with 16,300 steps of resolution providing very precise valve position control. The flow control algorithm and the finite control of the stepper motor provide the best possible steam input control.

Adjustable Frequency Drive (AFD)
The low temperature solution pump and absorber spray pump flow rate are controlled by adjusting the operational speed of the pumps. This is done by the AFD's. The main unit control panel outputs an analog signal to the AFD's that drive the solution pumps at the desired speed to provide the correct amount of solution flow for the machine load condition. This section discusses the AFD.

AFD Description:
An adjustable frequency AC drive is a device for controlling the speed of an AC motor by changing the frequency of the power supplied to the motor. The adjustable frequency drive is a solid-state power conversion unit that receives 3 phase, 60 Hz input power, converts it to DC power, filters it, and then inverts it to provide motor power that is modulated to the frequency desired. The AC drive also regulates the output voltage in proportion to the frequency to provide a nominally constant ratio of voltage to frequency as required by the characteristics of the AC motor.

AFD Operation within the Absorption System
The output from the AFD's provides power for the Absorber (4B2) and Low Temp Solution (4B3) pumps.

Operating Frequency
Figure 11 illustrates the solution range of frequencies used for typical pump motor control, 25 Hz minimum to 54 Hz maximum. The minimum and maximum stop values, used in this example, are the frequency utilized range. The end points will change by machine size and are factory selected. The end stop locations, indicated in Figure 11, illustrate the difference between available and actual frequencies that could be used during a factory calibration of the controls.

See operator guide for AFD Keypad illustration and flow chart of menu item.

Figure 11 – Pump Motor Supply Frequency

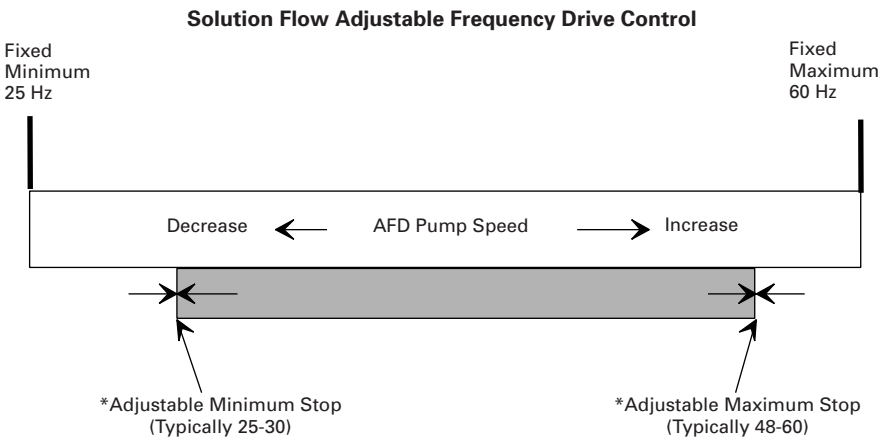

*Setting established and programmed at machine start-up.

Sequence of Operation

Purge System Operation

The machine is factory leak checked to high standards. Hermetic integrity is the focus of this design since stability of the unit vacuum is required to maintain chiller efficiency and reliability. Consistent maintenance practice will ensure that the factory established hermetic integrity is maintained. Non-condensables that accumulate in the machine must be removed by purging.

Absorber Removal of Non-Condensables
Absorber removal of non-condensables from the absorber/evaporator shell is accomplished via the pickup tubes and the eductor. Depending on the chiller configuration, the purge pickup tubes will be through a collection chamber or drop down tubes. Refer to Figures 12 and 13 to see the differences.

The eductor uses the solution being pumped by the Low Temperature Solution Pump (LTSP) to remove the non-condensables from the chamber and pickup tubes. The discharge of the eductor is to the suction side of the LTSP where the non-condensable are transported to the Low Temperature Generator (LTG). The dilute solution pumped through the LTSP carries the non-condensable to the LTG section. In the LTG the non-condensable are released from solution and migrate to the lower pressure of the condenser. From the condenser, the Purifier Purge removes the non-condensable by creating even a lower pressure in the purge tank. Any non-condensable from the high temperature generator are passed to the condenser through a vent line. The Purifier Purge pumpout cycle initiates and terminates per the suction temperature of the compressor. The lower temperature creates a lower pressure to draw non-condensables from the condenser into the purge collection tank.

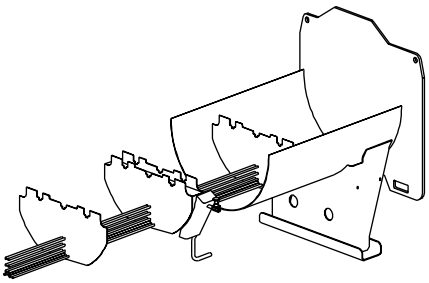

Figure 12 – Purge tubes and collection chamber (early design)

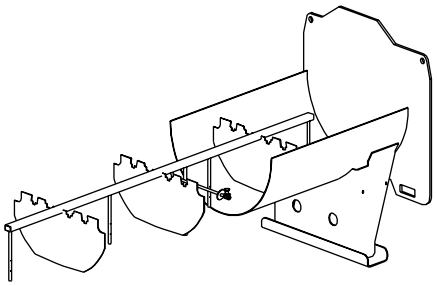

Figure 13 – Purge drop tubes (used on later chillers)

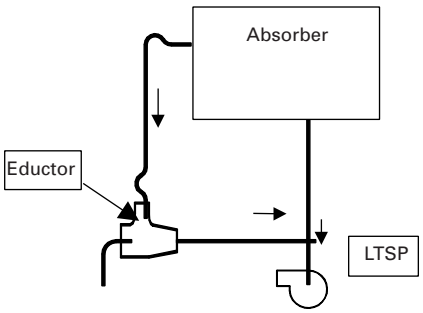

Figure 14 – Eductor Position

Timed Pumpout
The purge system will initiate a "timed pumpout" cycle periodically, as determined by the timed pumpout settings within the Service Settings field start-up menu. This pumpout will pump out of the absorber via the lower motorized valve. Usage depends on machine characteristics and load conditions.

Automatic Purifier™ Purge Operation
Automatic purge operation occurs with the absorption machine "on". The normal mode of operation is with the purge set to "On" on the control panel clear language display. With "On" purge operation, the purge condensing unit operates during chiller operation, and vacuum pump runs continuously. The condensing unit draws non-condensables out of the condenser to a non-condensable collection tank.

The purge senses when the collection tank contains non-condensables via suction temperature and executes the pumpout cycle as necessary. A pumpout valve opens to allow the vacuum pump to expel the collection tank of non-condensables. Pumpout time is monitored and stored for analysis.

If the purge suction temperature drops below the 30°F [-1.1°C] inhibit level, the purge system will go into a "standby" mode.

Automatic operation of the purge system when the chiller is in the off position is slightly different. Only the vacuum pump operates and the motorized valve(s) open and close based on the purge pumpout time and duration interval defined in the Field Start-up menu.

Sequence of Operation

Purge Operation Modes

Within Operator settings, purge operation can be selected as: Off, On, or Service/Pumpout.

Table 3 identifies the modes and the status of the major components in each mode.

Table 3 – Modes and Status of Major Components in Each Mode

Purge Operating Mode	Chiller Operating Mode	Condensing Unit	Vacuum Pump	Pumpout Valve (s)
Off	On/Off	Off	Off	Closed/Off
On	On	On	On	Pumpout By Temperature
On	On	On	On	Pumpout by timed interval (absorber valve, if installed
On	Off	Off	On	Pumpout by timed interval (condenser tank valve only)
Service Pumpout	NA	On	On	Open/On

Note: Normally, purge should be in the "on" mode position.

Purge Components

Purifier Purge Operation

The purifier purge is active when the purge-condensing unit is powered. The evaporator coil of the condensing unit is used to condense refrigerant vapor in the purge collection tank. This results in a slightly lower pressure in the purge collection tank thus, drawing refrigerant vapor and non-condensables into the purge collection tank. Refrigerant vapor and non-condensables enter the purge tank through a pickup line connected at the bottom of the purge tank.

Once inside the tank, the refrigerant vapor condenses on the purge tank coil and falls to the bottom of the tank, leaving non-condensables to accumulate. Liquid refrigerant returns to the condenser through the return line. The pickup and return lines have isolation valves that can be closed when tank service is required.

Figure 15 – Purifier Purge Components

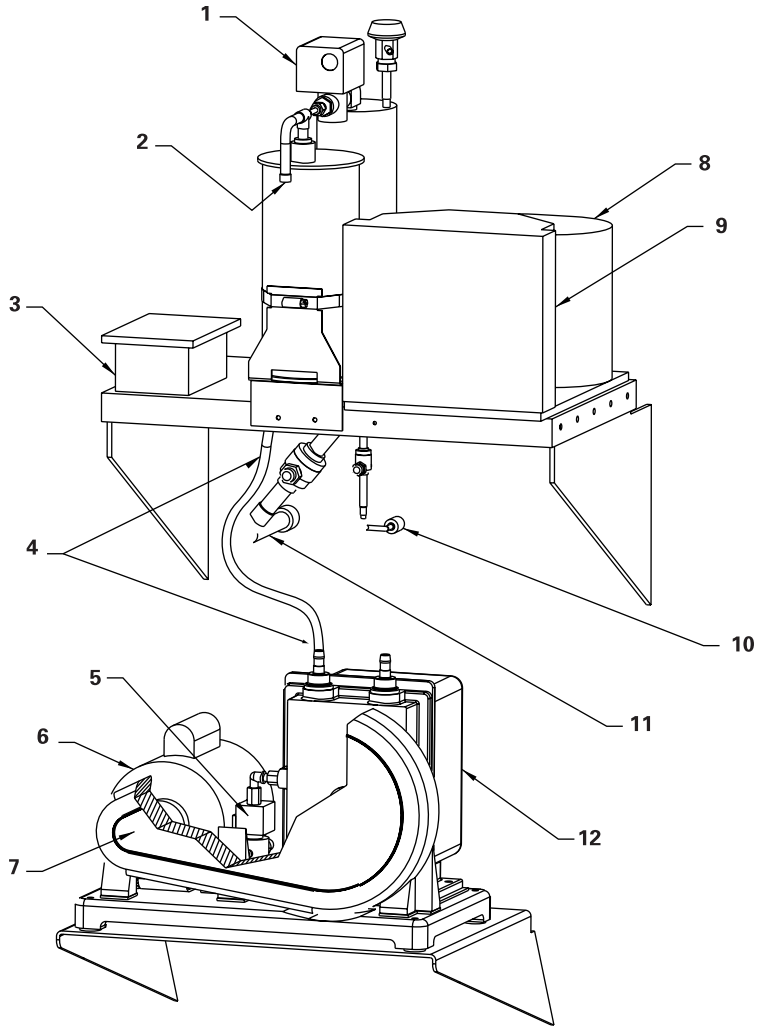

Legend for Figure 15:

1. Pumpout Valve
2. From Absorber Valve
3. Electric connection
4. Tygon Hose
5. Solenoid Valve
6. Vacuum Pump Motor
7. V-Belt Guard
8. Compressor
9. Condenser Unit
10, Return line Isolation Valve
11. Tank Pickup Line and Isolation Valve
12. Vacuum Pump

Sequence of Operation

Purifier Purge Operating Cycle

Figure 16 illustrates the cycle of the active purge.

As non-condensables accumulate in the purge tank (1) the available condensing surface in the tank becomes limited, and the condensing unit compressor suction temperature (2) will begin to fall. When the condensing unit compressor suction temperature drops to the pumpout temperature, a sensor signals the purge module and a pumpout cycle begins. Non-condensables in the purge tank are then evacuated with a vacuum pump. As the non-condensables are removed from the purge tank, the condensing unit compressor suction temperature increases. This condensing temperature is again sensed at the purge module that will terminate the pumpout cycle when this temperature rises sufficiently. The pumpout suction temperature varies in relationship to the units condensing temperature. This allows purge operation with condensing temperatures from 50°F to 180°F [10°C to 82°C].

Figure 16 – Purifier Purge Refrigerant Circuit

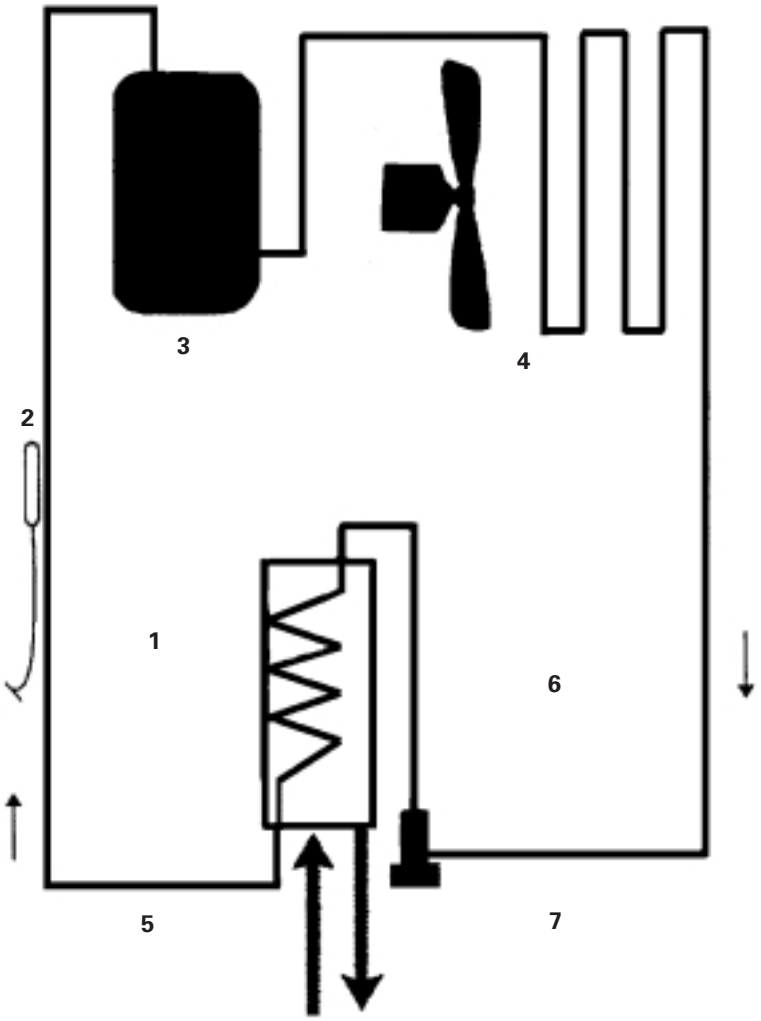

Legend for Figure 16:
1. Purge Tank (with Spiral Evaporator Coil
2. Temperature Sensor
3. Compressor
4. Condenser
5. Purge Tank (Gaseous Refrigerant from Chiller Condenser)
6. Expansion Device (Suction Pressure Regulating Type)
7. Purge Tank Outlet (Liquid Refrigerant Returned to Chiller Condenser)

Operator Guide

Using the Control Panel

This section provides detail of the operator interface display, operation, keypad key functions, display group menus-report and settings, and how to use these functions.

Operator Interface (Local Clear Language Display – LCLD)

The operator interface (LCLD) provides a method to communicate with the chiller. The operator selects information to be displayed from eight group keys that have predetermined menus. All operator selections and monitored information are entered and/or displayed from this device. The operator interface obtains the selected setup values and data from the interprocessor communications (IPC) link. The settings and temperatures will not be displayed until they have been read by way of the IPC. Displayed items, such as temperature, will be updated every two seconds. Service mode menus provide machine setup, service tests, and manual control operation.

Figure 17– Operator Interface

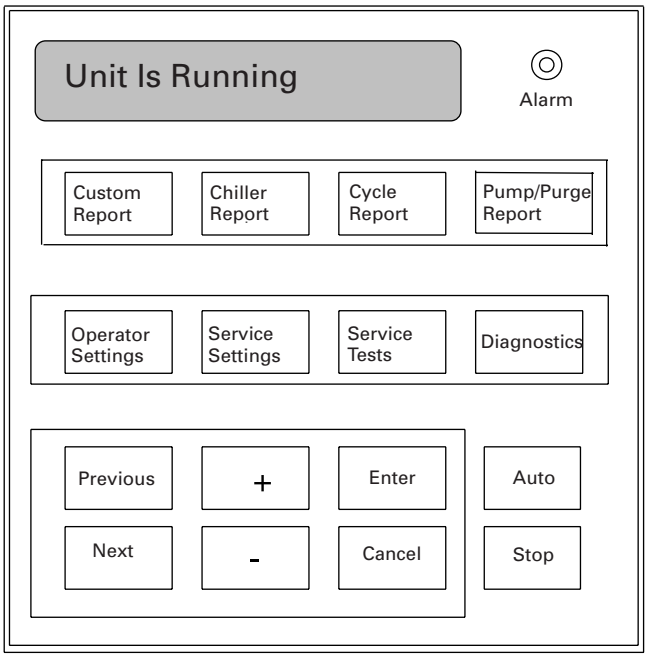

Display
Figure 17 illustrates the operator interface that features a two-line, forty-character display, an alarm indicator (LED), and a keypad for the selection of specific formatted chiller information menus. The display has backlighting for legibility in low light conditions. This backlight is also used to maintain the operating temperature of the display. During low ambient temperature periods the backlight will illuminate. This is done by the control module controlling the backlight current, based on the equipment room ambient temperature.

Menus
The display includes all operation status, reports, settings, service, and diagnostic messages. Details of these menus are discussed later in this section

Alarm LED

1. The single red LED located to the right of the display will BLINK whenever a machine manual reset (MMR) diagnostic exists and manual machine reset is required to restore operation.
2. The alarm LED will illuminate continuously when a service test item is placed into manual mode operation. The LED serves as a reminder that something remains in manual mode.

Normal machine operation does not require manual mode operation of any service tests (password protected) items.

Operator Guide

Operator Interface (LCLD) Operation

Keypad
Figure 17 illustrates the operator interface keypad. The keypad is a sealed membrane type with 16 keys arranged 4 by 4. The keys are separated into three fields:

1. Report keys are located across the top row and are used for viewing of preformatted information menus.
2. The second row of keys are setting's group menus.
3. Functional keys are located across the bottom two rows and are used to input changes.

The functional keys are discussed next since the operation determines how the user communicates with the report and setting's menus.

Functional Keys
The Next and Previous keys cause the display to step through the various menus within a group. The report group will sequence around to the top or bottom of the group when the end or beginning is reached, respectively. The (+) and (-) keys cause the setting being displayed to increase or decrease, respectively. If the (+) or (-) key is held down for more than 1/2 second it will increment or decrement the setting continuously at 10 counts per second, until the key is released. (Settings do not wrap around when the end of range is reached.) Once the (+) or (-) key has been pressed to select a particular setting, the Enter key or Cancel key must be pressed. (The Next or Previous keys will not advance until Enter or Cancel is pressed.) A Setting is not changed until the Enter key is pressed. The Cancel key is pressed if a changed setting should not be saved. When the Enter key is pressed the display will blank out momentarily to indicate to the operator that the keystroke was recognized.

If the boundaries of a specific selection are exceeded the operator interface will display out of range and will not allow that selection to be entered.

When Auto is pressed the chiller will enter an auto mode of operation. When Stop is pressed the chiller will stop, entering the "Unit is Preparing to Shutdown" mode.

During the five-second period a message indicating the optional emergency stop command will be displayed. The Stop key is located in the lower right hand corner.

IMPORTANT

If the Stop key is pressed a second time within five seconds an immediate "Panic Stop" will be executed, overriding the normal "Unit is Preparing to Shutdown" mode.

To restart the dilution cycle, press the Stop key. To reenter auto mode press Auto. If the leaving water temperature does not exceed the differential, to start the dilution cycle is entered for the duration of the timer, and "Auto waiting need to cool" will be displayed along with dilution cycle time remaining. If the leaving water temperature is greater than differential to start, then the restart auto sequence will occur.

When the Auto or Stop key is pressed the display will go to the first display of the Chiller Report indicating the current operating mode.

Operator Guide

Using Group Menus

1. Select one of the group keys labeled Chiller, Cycle, or Purge-Pump since these groups contain preformatted report menus. This will bring up the respective header display. Pressing Custom Report will bring up its header display however; there may not be any items within this group at this time. Pressing Operator Settings, Service Settings, Service Tests, or Diagnostics will bring up its header display. See the operator interface overview for a listing of display headers and the menu items.
2. Press the Next key to advance, or press the Previous key to backup, while scrolling through the displays within each group menu. (To quickly go to the last menu item press the Previous key at the display header.)

To Create the Custom Report:

1. Go to one of the Report Groups (Chiller, Cycle, Pump/Purge) and select the desired menu item to add to the Custom Report.
2. Press the (+) key. The item is now entered into the Custom Report group.
3. To add another repeat step 1 and 2.
4. Up to twenty items can be entered into the Custom Report group. When there are twenty items in the report no more can be added until one is removed.
5. To remove an item from the Custom Report, press the (-) key, while it is displayed.

To Change Settings

1. Press the appropriate settings group key.
2. Press the Next key at the header display.
3. Enter password if required.
4. Use the Next/Previous key to bring up the item to be changed.
5. When the item to be changed is on the display press the (+)(-) to bring up the new value.
6. Press Enter to enter the new value. Press Cancel to keep the previous value.

To Reset the Chiller

1. Press the Diagnostics group key.
2. The Diagnostics display header will be shown. Press the Next key.
3. Enter password if required.
4. View all active diagnostics displayed. Investigate and correct the problem that caused the shut down, before proceeding to restart the chiller.
5. To reset the chiller press Next until the diagnostics clearing display stating “Press (Enter) to clear all diagnostics and reset system” is displayed. Press Enter. When the diagnostic is cleared the chiller will return to the operational mode that was interrupted by the diagnostic. The chiller must not be reset until the diagnostic condition is addressed, and corrected. If required, contact the local Trane service agency for assistance.
6. Chiller may restart if in “auto” and differential to start is satisfied. Press stop to prevent starting, if desired.

To Change Set point

1. Press Operator Settings key.
2. Using the Next key, advance to “Front Panel Chilled Wtr Setpt.”
3. Using the +/- keys, change the Set point as desired. Press Enter.

Purging

The purge operation mode is normally set to “on“ mode.

While in on, purging will occur during machine auto and stop modes of operation. To check or set to on:

1. Press Operator Settings key.
2. Press Next to advance to “Purge Operating Mode” display.
3. Use +/- keys to toggle between modes. Select On. Press Enter.

For manual on purging see maintenance section.

Operator Interface (LCLD) Overview

The following is a listing of preformatted menu information contained in the operator interface, including options.

Menu items are listed in sequence and in columns under each group key. See Fogire 18 through Figure 23.

Figure 18 – Custom Report, Chiller Report, Cycle Report

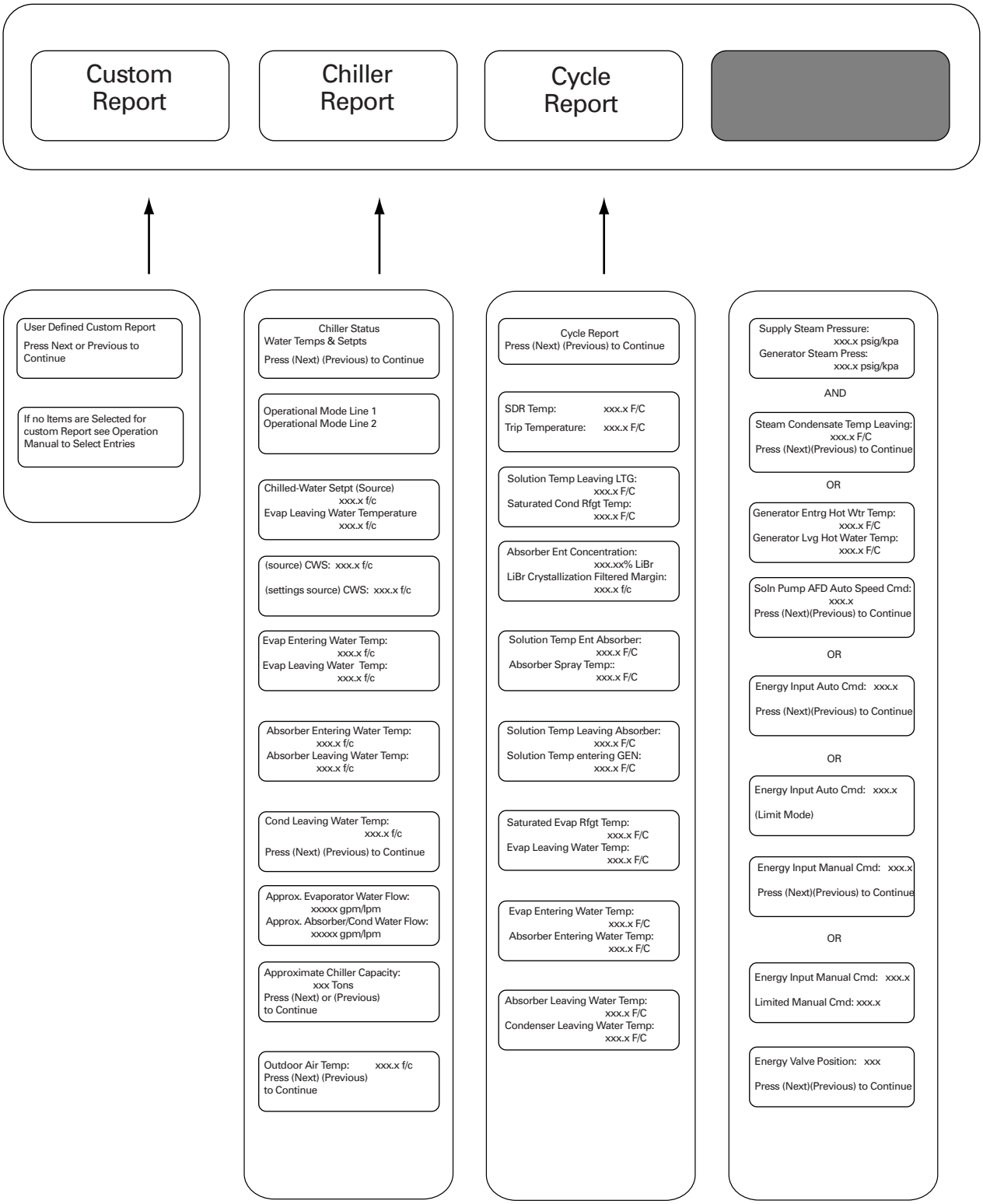

Figure 19 – Purge Pump Report

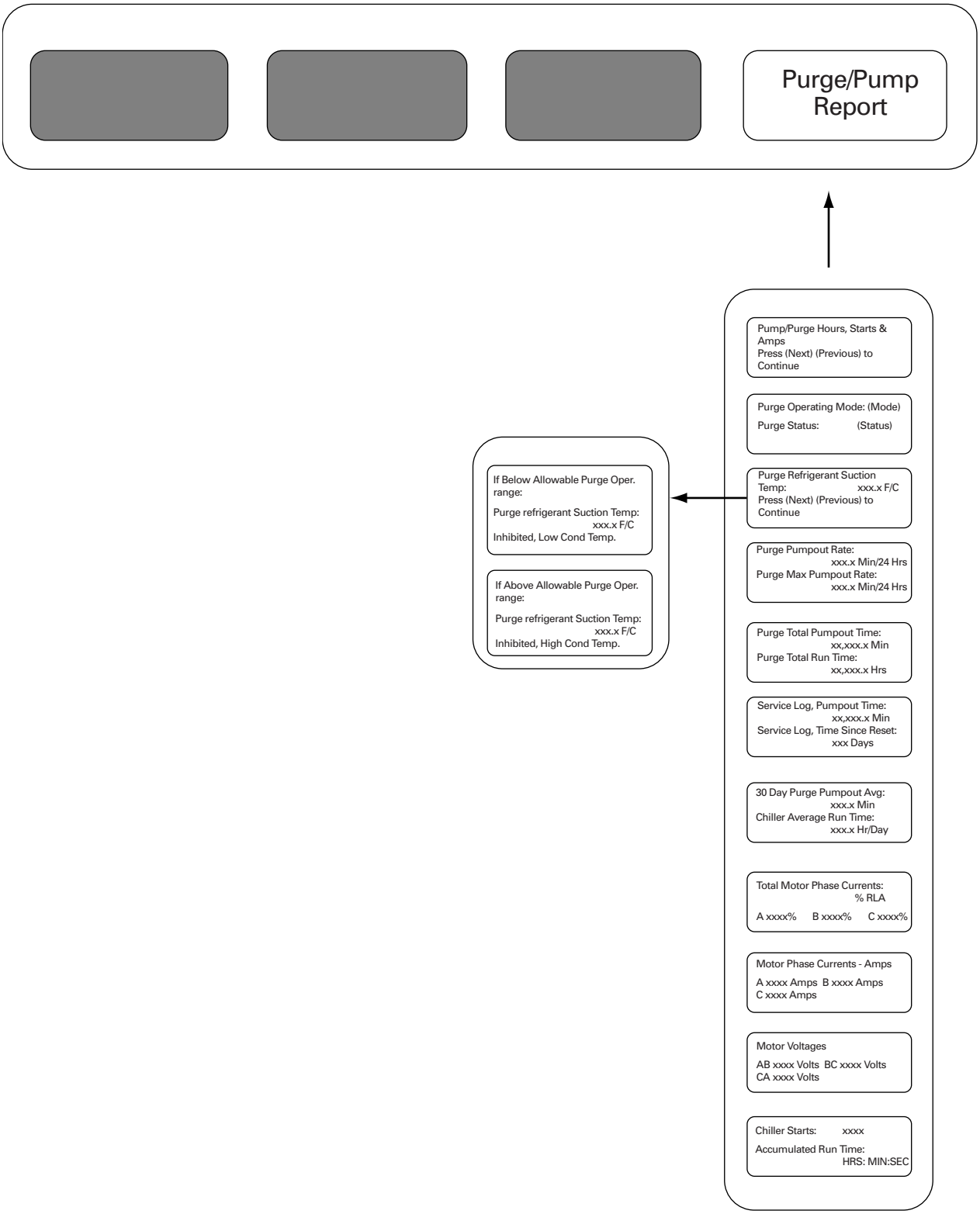

Figure 20 – Operator Settings

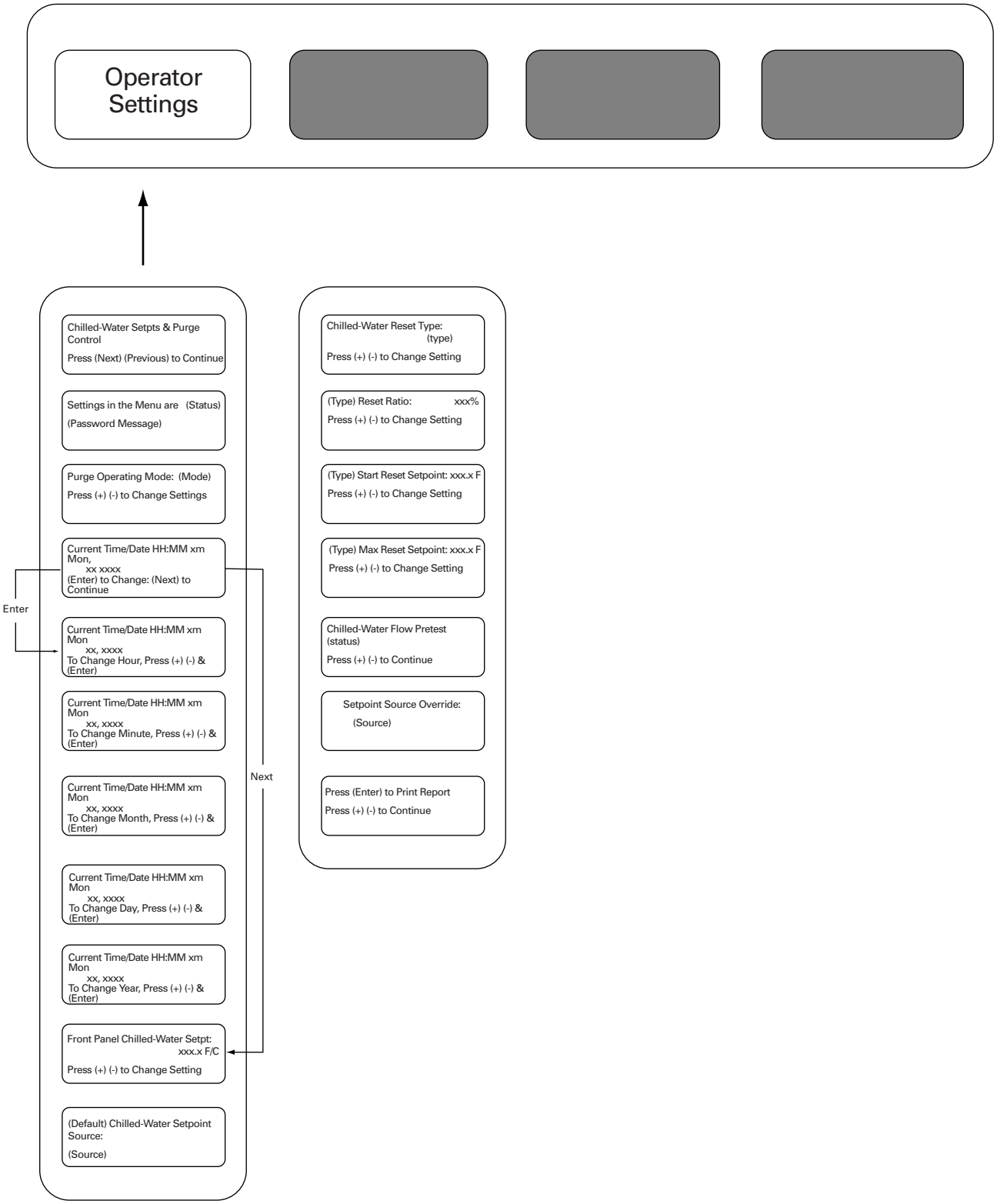

Figure 21 – Service Settings

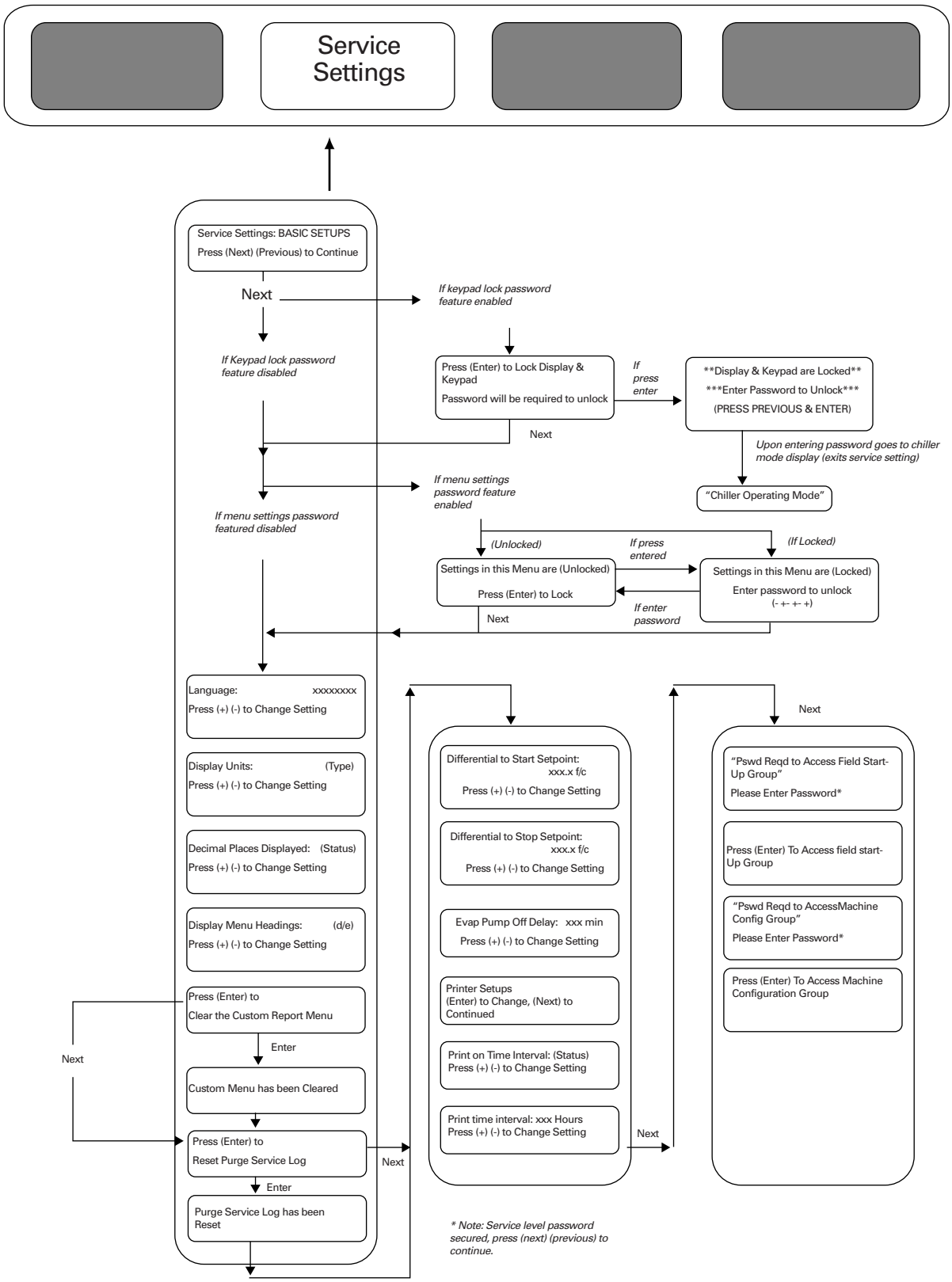

Figure 22 – Service Tests

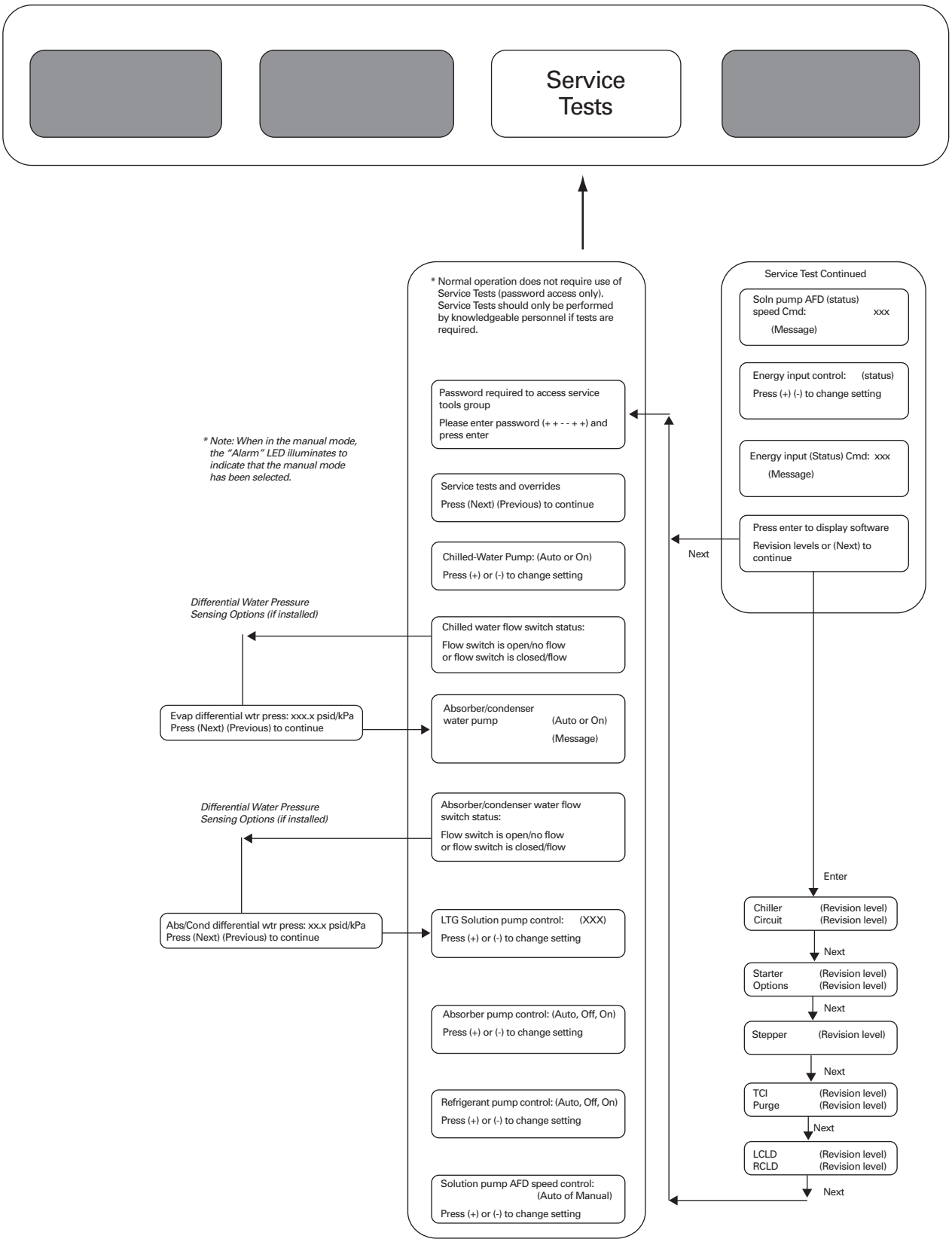

Figure 23 – Diagnostics

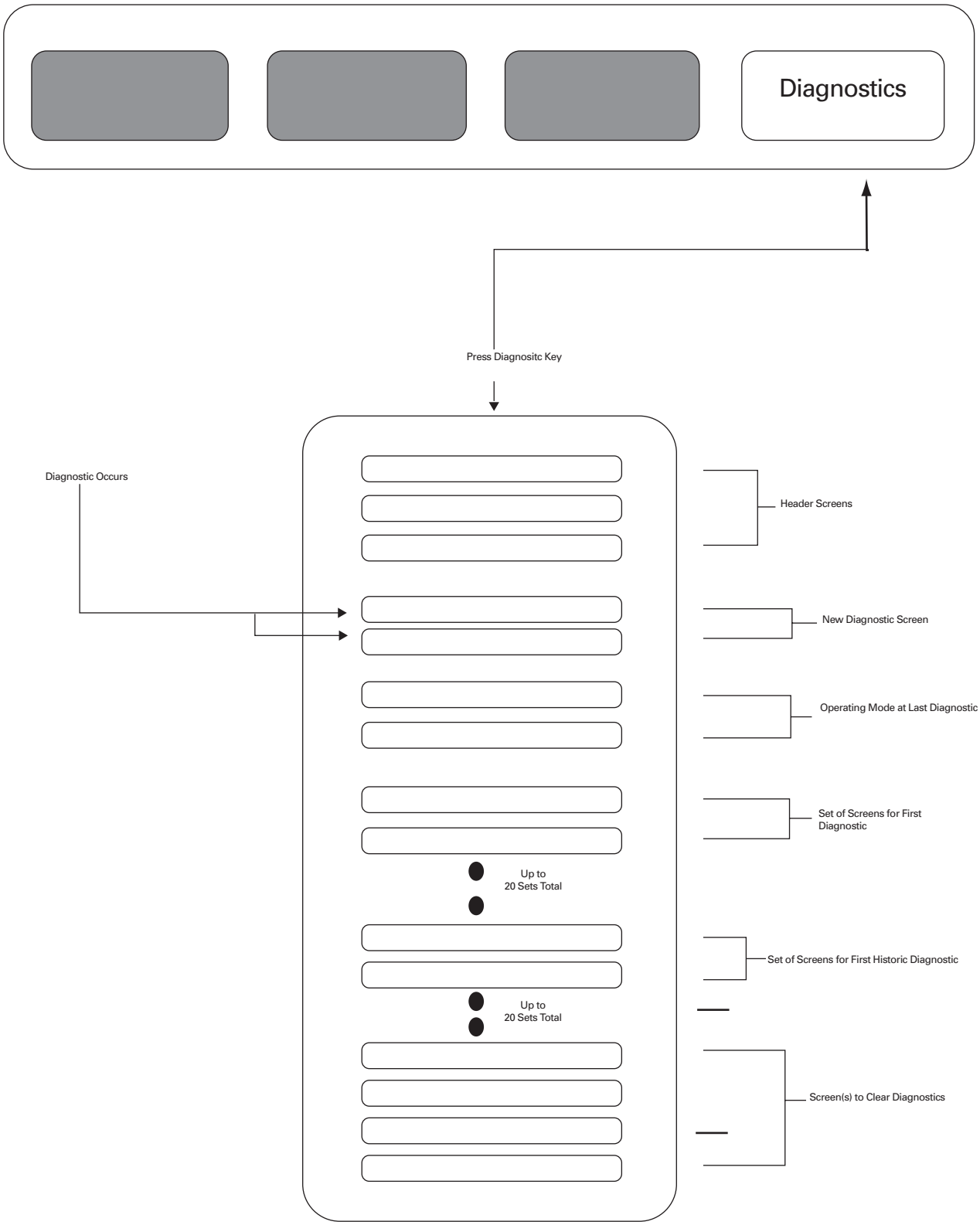

Operator Guide

Operator Interface Detail

This section provides detailed menu information.

Report Menus

The Report Keys (top row) allow the operator to access four report groups that are labeled CUSTOM, CHILLER, CYCLE, and PUMP/PURGE. The CUSTOM report is formatted by the machine operator. The report groups (CHILLER, CYCLE, and PURGE/PUMP) have preformatted menus.

When a report group key is pressed the menu header is displayed. The header display indicates the title of the report group and a brief summary of the reports contained in the group. This enables a user to quickly review each report header to determine if the desired information is in the group. The header also serves as the top of the report indicator.

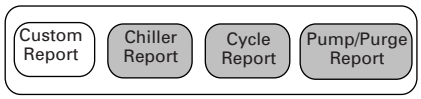

Custom Report
The Custom Report contains information selected by the operator. The custom report section allows the user to select and display up to twenty items of their choice selected from the CHILLER, CYCLE, and/or PUMP/PURGE report groups. The Custom report is the only report where the displayed information is selected by the user.

The custom report can easily be programmed by the following sequence:

Menu Items can be duplicated in the custom report by pressing the (+) key, when the desired report is being displayed from one of the other report menus. The custom report group can contain up to twenty entries. Attempting to enter another report when the user custom report is full results in the display indicating "User Report -> Full." To change or remove reports in the custom report group, simply press the (-) key while it is being displayed and the report item is removed.

The custom report sequence starts with the following header display:

User Defined Report
Press (Next) (Previous) to Continue

If no entries are selected and the next key is pressed the following is displayed:

No Items are Selected for Custom Report
See Operators Manual to Select Entries

If entries exist they will be displayed in the order that they were selected from the other report groups.

The **Chiller Report, Cycle Report, and Pump/Purge Report** groups contain preformatted information that cannot be changed.

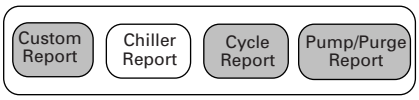

Chiller Report
The **Chiller Report** contains unit operating condition information. Status, water temperature, and set points.

Chiller Operating Mode: Two lines of display indicate the Chiller Operating Mode depending upon machine status, various chiller operation modes that can be displayed is illustrated in the column to the right. In the case of timing functions, line 2 indicates the associated timer information. Timer functions are displayed and inform the operator of expected delays within the sequence of operation.

Operating Mode Line 1 and Line 2
(Two Lines Describing Operating Conditions)
Press (Next) or (Previous) to Continue

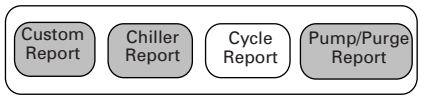

Cycle Report
The **CYCLE REPORT** is used to display machine temperatures and pressures.

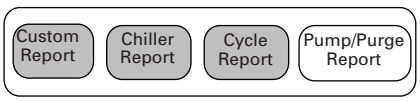

Purge/Pump Report
The **PUMP/PURGE REPORT** is used to display run time information regarding pumps in the machine.

Table 4 – Chiller Operation Mode Displays

Machine Condition	Displayed Message (First Line/Second Line)
Reset	Resetting
Stop	Local Stop: Cannot be overridden by any External or Remote Device
Remote Stop	Remote Display Stop: Chiller may be set to Auto by any External or Remote Device
External Unit Stop	Remote Run Inhibit from External Source
Unit Remote Stop	Remote Run Inhibit from Tracer
Start	Initializing
Start Time Remaining:	Starting is Inhibited by Staggered Start Minute/Second
Start	Starting
Start	Starting Waiting for Chilled Water Flow
Auto	Waiting for Tracer Communications to Establish Operating Status
Auto	Auto Waiting for a Need to Cool
Start	Starting Absorber/Condenser Water Flow
Start	Starting Solution Pumps
Start	Starting - Pre-heating Solution Spray Pumps Off
Start	Starting - Pre-heating Solution Spray Pumps On
Run: Normal Cooling Only	Unit is Cooling
Run: Low Cooling Water Temperature Limit	Unit is Running: Low Absorber/Condenser Temperature Limit
Run: Evap Limit	Unit Is Running Low Evaporator Refrigerant Temperature Limit
Run: Crystallization Sensing Detection and Recovery	Solution Recovery Pump Off Time Remaining Minute/Second
Run: Crystallization Sensing Detection and Recovery	Solution Recovery Pump On Time Remaining Minute/Second
Dilution Cycle	Dilution Cycle Remaining: Minute/Second Waiting for a Need to Cool
Dilution Cycle	Dilution Cycle Remaining: Minute/Second Diagnostic Shutdown Auto
Dilution Cycle	Dilution Cycle Remaining: Minute/Second Diagnostic Shutdown Stop
Dilution Cycle	Dilution Cycle Remaining: Minute/Second Local Stop
Dilution Cycle	Dilution Cycle Remaining: Minute/Second Remote Stop
Dilution Cycle	Dilution Cycle Remaining: Minute/Second Remove Run Inhibit from External Source
Dilution Cycle	Dilution Cycle Remaining: Minute/Second Remote Run Inhibit from Tracer
Stop: Transitioning to Stop	Transitioning to Stop
Panic Shutdown	Panic Shutdown Sequence Complete Press Auto/Stop to Continue
Diagnostic Shutdown	Diagnostic Shutdown Stop Stop Mode
Diagnostic Shutdown Auto from Auto Mode	Diagnostic Shutdown Auto

Operator Guide

Settings Menus

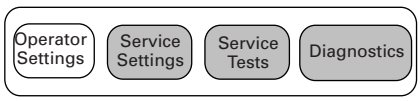

Operator Settings
The Settings keys (second row) allow the operator to select from four menu groups. Entering a group allows the operator to select any items contained within the group. A setting's group starts at a header display when the selected setting's key is pressed.

Operator Level Password
The operator settings, service settings (basic setup), and diagnostics group menu items can be secured by an operator level password.

This feature is predetermined and set at the factory. If operator password is desired contact your local Trane service company. On all machines, this feature is selected within a higher level security accessible within the service level password field start-up group.

When this feature is enabled, the display following the header will state either "Settings in this menu are LOCKED or UNLOCKED." If LOCKED, the second line will state "Enter password to unlock." Operator level password is

(-+-+-+ & Enter). An incorrect password will result in the message "access denied." If UNLOCKED, the second line will state "Press (Enter) to lock." Pressing ENTER will lock all the settings within the three groups (operator settings, service settings (basic setup), and diagnostic groups). When locked, menu items can be viewed, however, the second line of the displays will not indicate "Press +/- to change setting" and any attempt to change a setting will cause the second line to momentarily indicate "setting is locked." To UNLOCK, sequence back to the screen that states enter password to unlock the three groups (operator settings, service settings (basic setup), and the diagnostics groups).

When "Service Settings, Field Start-up" selection of this feature is disabled the previous operator password displays and indications of locked or unlocked is bypassed and is not shown.

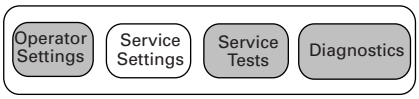

The **Service Settings** menu has three submenus within it. The first is non-password protected and consists of all the settings, feature enables, set points, and so forth. While they are seldom changed by a user, changes in them do not seriously effect the protection or reliability of the chiller.

The other submenus (field start-up and machine configuration) are protected, each with a separate service level password. These are for changing parameters and settings regarding field commissioning and fundamental protection and control of the chiller subsystems (Field Start-up) or for programming of the unit control module (UCM) as to how the specific chiller was built in the Factory (Machine Configuration).

Once properly set, these menus should never be changed again without specific knowledge of the effects of the changes. In rare instances, certain field problems may be corrected by making changes in these protected menus but certain aspects of chiller reliability may be compromised. The main reason these are accessible at all is for field commissioning and to allow for the programming of service replacement modules.

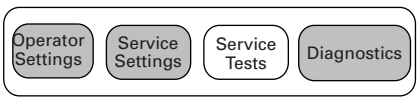

Service Tests
The Service Test menu provides access to screens used to change from "Auto" mode to Manual mode. Manual mode control overrides specific auto control functions. Tests and status screens provide a means to check the operation of some output and input devices.

Anytime a manual mode is selected the alarm light will remain on.

Normal machine operation does not require the use of any service test items; therefore they remain within a password-protected (+ + - - + +) menu. Manual operation of these items will effect chiller operation and will cause unreliable operation, if left in manual mode. It is therefore recommended that only qualified personnel use service tests.

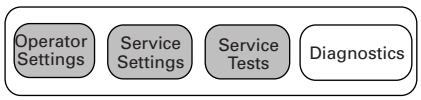

Diagnostics Menu
The Diagnostics Menu contains both active and historical information. The menu also contains the facility to clear active diagnostics, historic diagnostics, and purge diagnostics as individual groups. To clearly enunciate the occurrence of a diagnostic, the display will automatically go to this menu and display certain messages as explained below.

New Diagnostic Display Sequence
When a new diagnostic is sensed by the system, the display will reset to the diagnostic menu. A "one-time" screen will be displayed to inform the user that a new diagnostic has been detected.

This "one-time" screen will vary depending on the type of diagnostic detected. The two major categories of diagnostics are those which are informational warning only (IFW), and those which have resulted in machine shutdown; machine shutdown manual reset required (MMR) and machine shutdown auto reset (MAR).

Operator Guide

Adjustable Frequency Drive (AFD) Keypad
Figure 24 illustrates the AFD keypad. Machine operation does not require using this keypad. The AFD will normally operate in “auto” mode. Only in the case of abnormal condition for reset, or by service personnel, will this keypad require usage.

⚠ CAUTION

The AFD is factory programmed for use in this application. Do not attempt to reprogram any parameter as this may jeopardize machine operation and reliability.

Figure 24 – AFD Keypad Overview (Model JVOP-130P Illustrated)

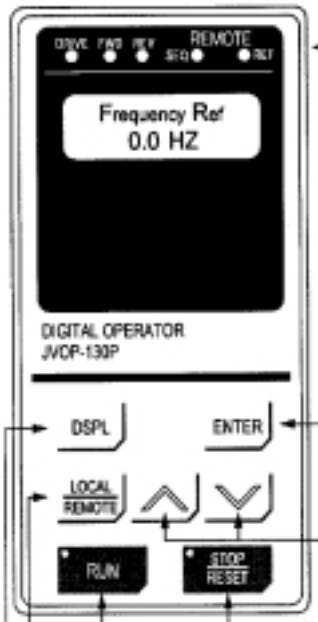

Operation Mode indicators:
DRIVE: Lit when in operation mode.
FWD: Lit when there is a forward run command input.
REV: Lit when there is a reverse run command input.
SEQ: Lit when the run command from the control circuit terminal or serial communication is enabled.
REF: Lit when the frequency reference from control circuit terminals FV or FI, or serial communication is enabled.

Display (LCD)
Displays set value of each function or monitoring values such as output frequency and current (2 line x 16 character alphanumeric).

Enter Key
Displays the current value of each parameter and allows new values to be entered.

Increase/Decrease Keys
Changes set values or parameter numbers.
∧ : Increment key
∨ : Decrement key

Operation Command Keys
Operation command keys operate the inverter.
STOP/RESET: Red LED lights after depressing STOP key. Inverter operation is stopped. (resets operation after faults; reset is disabled while run command is ON)
RUN: Red LED lights after depressing RUN key. Inverter operation begins.

Operation Mode Selection Key
Alternate between REMOTE and LOCAL (digital operator) operation.

Display Key
Scrolls through display monitors and Quick-Start parameters, and allows access to all parameters.

Operator Guide

Pressing the "DSPL" key advances the Digital Operator through the Menus illustrated in Figure 25.

Figure 25 – LED Description

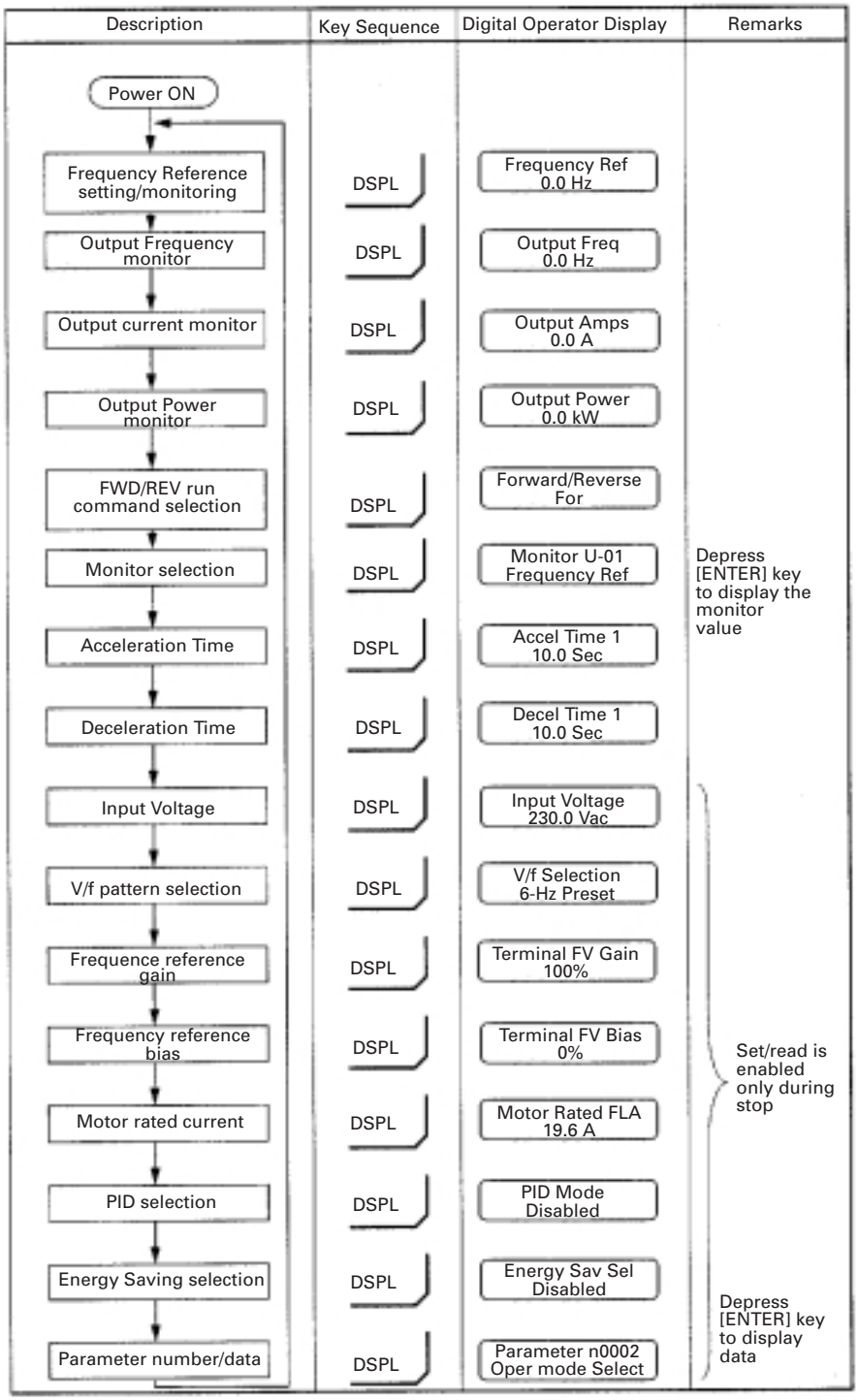

Maintenance

Maintenance

This section contains maintenance information for the Steam or Hot Water Absorption Chiller.

Daily Maintenance
To ensure reliable, safe and efficient operation the following items should be checked daily as routine maintenance. This will avoid unnoticed problems that could lead to down time, and provides daily data that can highlight trends, locating potential problems before they occur:

1. **Record and review operating data.** Use the operating log found on the next page and log the points suggested.

   Familiarization with the daily log temperatures and other items allows the operator to identify when a change occurs, possibly indicating an abnormal condition. Review the daily operating history with the service personnel as necessary or at the next inspection. (Verify temperatures and pressure gauges for operation.)

2. **Make sure the machine is operating properly.** Cycle the machine on and off periodically to make sure it starts and stops properly. This allows safety devices to sequence through a start-up to confirm operation.

3. **Check the cooling tower for correct water treatment, machine inlet temperature and flow, and check system chilled water (Evaporator Circuit).** Check water flow pressure drop daily. Clean strainers yearly.

   The owner should engage the services of a qualified water treatment specialist to obtain the treatment needed to control tube fouling and maintain machine efficiency. Untreated or improperly treated water will reduce machine efficiency, and may require extensive tube cleaning or possible tube replacement, if the chemical balance of the water is not controlled.

⚠ CAUTION

Always allow the chiller to complete a dilution cycle before disconnecting the chiller power source.

Maintenance

Figure 26

Horizon – Absorption Operating Log

Job Name _____ Serial Number _____

Machine Model Number _____ Date - Month: _____Week: _____

Item		Sunday		Monday		Tuesday		Wednesday		Thursday		Friday		Saturday	
		AM	PM	AM	PM	AM	PM	AM	PM	AM	PM	AM	PM	AM	PM
Evaporator Pressure	IN														
	OUT														
Absorber/Condenser Pressure	IN														
	OUT														
Accumulated Run Time															
Solution Cycle Data Items															
SDR Temperature															
Solution Leaving Low Temperature Generator															
Saturated Condenser Refrigerant Temperature															
Absorber Entering Concentration															
LiBr Crystallization Margin															
Solution Temperature Entering Absorber															
Absorber Spray Temperature															
Solution Temperature Leaving Absorber															
Solution Entering Low Temperature Generator															
Saturated Evaporator Refrigerant Temperature															
Evaporator Leaving Water Temperature															
Evaporator Entering Water Temperature															
Absorber Entering Water Temperature															
Absorber Leaving Water Temperature															
Condenser Leaving Water Temperature															
Steam: Supply Pressure															
Steam: Generator Pressure															
Solution Pump AFD Auto Speed															
Energy Input Command															
Purge Status															
Suction Temperature															
Pump Out Rate															
Pump Out Time															
Time Since Pump Out Time Reset															
Chiller Average Run Time															

Maintenance

Seasonal Maintenance

Cooling Season Preliminary Reminders

The following items should be checked before seasonal start-up. Contact you local Trane service representative to perform the service.

1. Check unit vacuum. Check the actual unit internal vacuum to determine if purging is required, before the unit can be safely started after extended shutdown. See unit vacuum checkout. The maximum internal pressure is dependent on the machine temperature. If purging is required follow purging instructions (Purge section).
2. Determine the purge pump condition. Run the pump and verify performance. Check the ultimate pressure performance and change oil/repair pump if required.
3. Prepare machine for cooling. Fill condenser, vent air from the condenser water boxes. Venting will remove air from within the piping and avoid nuisance trips of the condenser flow switch input.
4. Check all piping connections for possible water leakage. Check absorber, condenser, evaporator water piping. Assure that any off season work and reassembly is complete.
5. Check pressure drop across the chiller evaporator and condenser sections. Compare to unit design conditions.
6. Visually inspect electrical system. Look for signs of any alterations performed since the last operational season, and verify wiring is intact. Clean AFD's of dust and grime.
7. Confirm the chilled/hot water pump, cooling water pump and cooling tower is interlocked. Check the field proof of operation interlocking wiring for the chilled/water flow, and for condenser water flow.
8. Determine electrical condition of pump motor contactors.
9. Test run the unit. Check machine control sequence.
10. Replace bromide filter.
11. Purge the machine of non-condensibles. Check purge rate after the machine is started. Keep machine energy rate reduced until purge rate diminishes during unit operation
12. Log unit-operating data. Check temperatures and pressures throughout the fluid cycle. Check that LTSP, ASP, and RP Amp draw and voltages are normal and not excessive.
13. Water treatment It is recommended that all tubes be tested periodically by a qualified nondestructive tube testing service. This testing will confirm tube condition and identify potential problems.

Extended Shutdown

Drain water circuits (evaporator, condenser, and absorber) completely, and blow out all water from tubes and water boxes.

Main power must remain applied to the unit to allow automatic purging.

Maintenance

Seasonal Start-Up Unit Vacuum Check

Start-up after extended shutdown should not be attempted until the unit vacuum is measured and compared with Chart 1. Any combination of temperature and pressure that falls on or below the line of Chart 1 indicates a safe condition. The unit purging is required before start-up if the measured vacuum is above the acceptable limit.

Check unit internal vacuum at the absorber service valve located on the side of the absorber shell. This valve is above the liquid level in the chiller.

Chart 1 – Shutdown Machine Vacuum Chart

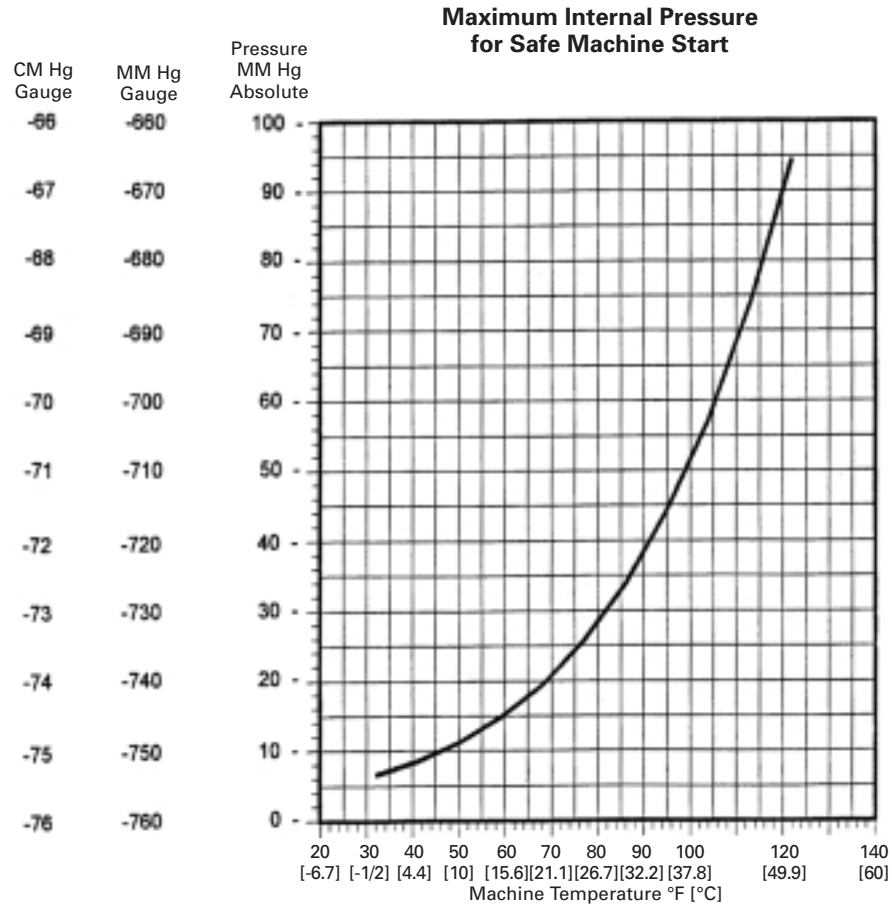

Maintenance

Purging During Extended Unit Shutdown
During periods of extended shut down, when chiller will not be operated, the operator can open an additional hand valve to provide a path for non-condensables between the evaporator/absorber section and the generator/condenser section. Reclose this manual valve before the chiller is placed into operation.

Purifier Purge Service Pumpout Operation
Servicing may require continuous pumping out of non-condensables. In this case, “service pumpout” mode can be used.

To enter Service pumpout mode select “Service Pumpout - ON” at the purge screen within the Operators Settings group. The condensing unit, vacuum pump, and valve all turn “on.” Service pumpout will run continuously until manually selected to another mode. No minutes will accumulate on the pumpout timer in the service pumpout mode.

Auxillary Absorber Pumpout - Manual
The absorber is automatically depleted of non-condensables during chiller operation by the eductor operation, and the absorber motorized valve. If manual pumpout is desired, this can be accomplished by way of the manual hand valve and the temporary connection of an auxiliary vacuum pump. Manual purging the absorber must only be performed during machine operation when the dilute solution level is below the top of the absorber.

Purge as a Maintenance Tool
Purge activity indicates non-condensables within the chiller. Excessive purging activity may indicate an air leak or unusual inhibitor consumption. An inhibitor analysis may be required. The 24 hour fault timer monitors the total pumpout time within any 24 hour period, and if it exceeds the preset timer setting a fault signal is generated to alert the operator that purge activity is excessive. The operator interface provides access to this data in the pump/purge report group.

Note: The pumpout time only accumulates the minutes of pumpout activity of the automatic pumpout operation. It does not accumulate the time of pumpout for service pumpout operation or timed pumpout operation.

Maintenance

Machine Checkout

General
To assure machine reliability, safety, and efficiency, routine maintenance of the chiller/control system is required.

During servicing, always operate the chiller from the unit local control panel. Always allow the chiller to complete a dilution cycle before disconnecting power. See sequence of operation for dilution cycle details located in the controls section.

CAUTION

Always turn electrical power supply(s) off before undertaking any maintenance that does not require machine operation.

Machine inspections should be performed periodically. Some inspection is recommended every 3 months, whereas others are at 6 and/or 12 months.

Inspection Frequency Recommendations
Table 5 illustrates machine related inspection items and the appropriate frequency. Performing the maintenance at the intervals suggested will provide the basis for machine reliability.

When appropriate, contact your local Trane service representative and follow component manufacturer recommendations in all cases, and check local codes for any additional regulations that may be required.

Service Frequency Recommendations
These recommendations may vary when unusual machine room conditions exist. Lithium bromide analysis is recommended yearly. The purpose is to determine solution inhibitor levels and replace as needed to control solution quality.

System Chilled Water (Evaporator) Circuit and Water Treatment

It is recommended that the owner engage the services of a qualified water treatment specialist to make tests and recommend the treatment necessary to control any contaminating material from the water.

THE TRANE COMPANY ASSUMES NO RESPONSIBILITY FOR EQUIPMENT FAILURE RESULTING FROM UNTREATED OR IMPROPERLY TREATED WATER.

It is further recommended that all tubes be tested periodically by a qualified nondestructive tube testing service. This testing will confirm tube condition and identify potential problems.

Check water flow pressure drop daily. Clean strainers yearly.

The system water circuit is a closed circuit and normally will not accumulate an appreciable amount of sludge or scale. However, if cleaning should be required, use the same method outlined for the cooling water circuit.

Table 5 – Machine Inspection Recommendations

Machine Inspection Items For the following Machine Items, refer to the applicable section in this Manual and/or contact a Trane service technician.	Months		
	3	6	12
1) Analyze unit solution to determine inhibitor consumption			X
2) Check unit control panel Sequence of operation			X
Check all wire terminal connections for tightness			
Check AFD's for cleanliness. Follow the corrective action in Table 12.			X
Always keep cover(s) closed on control panel and connection boxes.			
3) Check unit safeties setting and function – Contact a Trane service technician.		X	
4) Check purge system:	X		
• Checking belt tension and condition.		X	
• Check purge pump - ultimate pressure.		X	
• Replacement or overhaul purge pump – Contact a Trane service technician.			3 years
• Check for leaks, purge valves – Contact a Trane service technician.		X	
• Clean condensing unit coil – Contact a Trane service technician.		X	X
• Check condition of purge vacuum pump oil – Contact a Trane service technician.	X	X	X
5) Check volts and amps of solution pumps and refrigerant pump.		X	
6) Clean tubes.			X
• Brush tubes.			X
• Check water quality analysis of evaporator water and cooling water.	X*		
• Eddy current tube inspection should be conducted every third year of operation.			3 years
7) Solution Pumps: Verify amps, Listen to operation.			X

*Or as directed.

Maintenance

Condenser and Absorber Tube Care

Internal fouling of the condenser and absorber tubes will seriously reduce their ability to transfer heat to the cooling water.

The resulting higher temperature and pressure have several undesirable effects.

1. The refrigerant condensing capability of the condenser is reduced.
2. The absorber saturation pressure is increased because the solution is not cooled.
3. The higher condenser saturation temperature may cause the formation of hydrogen gas, which must be purged from the absorber.

NOTE: To insure reliable and efficient machine operation, the cooling water must be properly treated. The Trane Company assumes no responsibility for equipment failure resulting from untreated or improperly treated water.

Cleaning the Tower Water Circuit

Check water flow pressure drop daily. Clean strainers yearly or as conditions require.

Water available for cooling frequently contains minerals that will precipitate out on the walls of the tower water circuit in the form of a carbonate scale. Cooling towers collect foreign material that will deposit in the tubes and limit machine efficiency. At a minimum, condenser and absorber tubes should be brushed after each cooling season.

To insure maximum efficiency, the cooling water circuit must be kept free of both sludge and scale. Even a very thin coating of scale will greatly decrease the heat transfer capacity of the absorber and condenser bundles. The condenser tubes should be inspected once a year to determine if mechanical cleaning is required and if the water treatment is effective.

Figure 27 – Tube Cleaning Arrangements

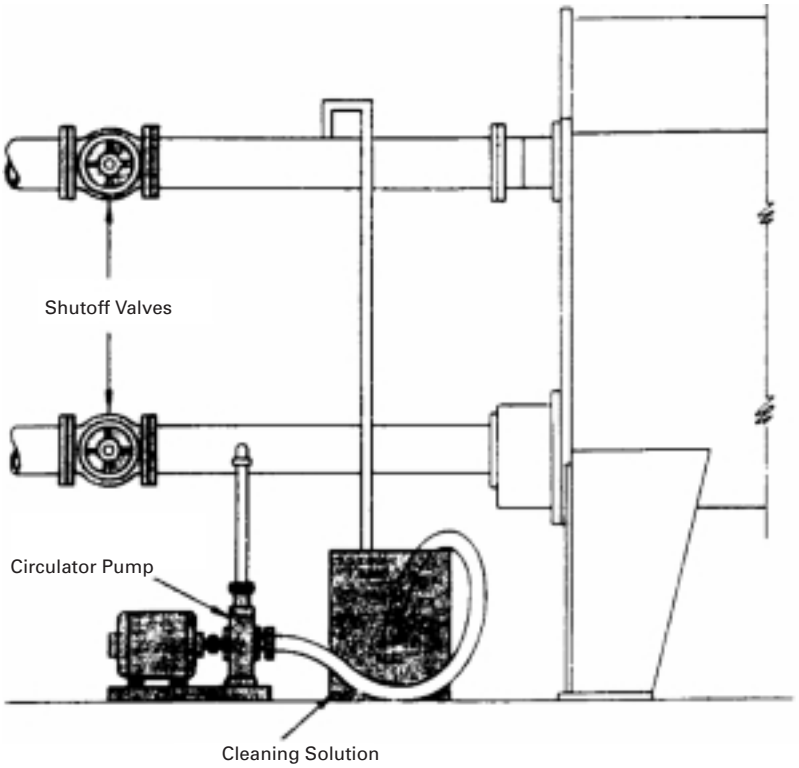

Two methods for cleaning the tubes are:
1. Mechanical
2. Chemical

The mechanical method is used to remove sludge and loose material from the tubes. Access to the tubes is obtained by removing the absorber and condenser water headers. To loosen the material, work a nylon or brass bristle brush through the tubes (a brass brush is recommended). After the material has been loosened, flush the tubes with clear water.

Scale deposits are best removed by chemical means. The tower water circuit is constructed of copper, steel and cupro-nickel.

Figure 27 illustrates a typical chemical-cleaning hookup. The cleaning hookup is made to pipe fittings installed in the absorber supply and condenser return piping.

All materials used in the external circulation system, quantity of solution, duration of cleaning period and any required safety precautions should be approved by the company furnishing the materials or performing the cleaning. Table 6 lists the liquid volume (in gallons/liters) of the tubes and water boxes.

Table 6 – Tube and Water Box Liquid Volumes (Gallons/Litres)

Tube and Water Box Volumes (US Gallons/Litres)		
Unit Size	Evaporator	Absorber/ Condenser
500	164 / 622	328 / 1241
600	189 / 717	375 / 1419
700	244 / 923	435 / 1648
800	273 / 1032	481 / 1820
975	300 / 1137	570 / 2158
1100	325 / 1231	612 / 2317
1225	350 / 1325	654 / 2476
1350	375 / 1419	696 / 2635

Maintenance

Water Box Cover Bolting Requirements

(Refer to Table 7)

To insure gasket sealing, the bolting procedure of covers must be as follows:

- Use anti-seize compound on all bolts before installing water box covers.
- Insert and snug up the first 6 to 10 bolts towards the centerline of each cover. Insure the cover is flat against the mating surface and the bolts are just more than finger tight.

• Tighten bolts starting from the center at top and bottom of each cover and working outwards to the corners.

Table 7 – Bolt Torque Requirements

Bolt Size		Torque	
(Inch)	[mm]	(Ft. Lbs.)	N-M
1/4	6	7	9.5
5/16	8	15	20.0
3/8	10	40	54.0
7/16	11	52	70.0
1/2	13	100	135.0
5/8	16	160	216.0
3/4	19	295	400.0
7/8	22	410	555.0
1	25.4	550	745.0

Note: General bolt torque's requirements for grade 5 zinc-plated course threaded bolts are listed above.

Cooling Tower Temperature Control

Control

1. Cooling tower water temperatures must be maintained at or above 65 F for reliable operation. Control panel logic circuits allow start-up at temperatures well below the design selection temperature and will protect against unsafe conditions.
2. To avoid oscillatory effects of tower water fluctuations being influenced on the leaving chilled water temperature entering tower water temperature control should be kept constant.

Any time tower entering temperature is at or below design, the potential for "Low cooling entering water temperature limit" exists. Depending on the chiller load, the actual temperature of the water will determine the likelihood to see this limit actively limiting machine capacity. The further away from design that the water temperature deviates the more limiting potential exists. This control system logic feature is built in to assure continued machine operation and machine reliability, and to control the potential for salt carryover and/or crystallization.

The maximum rate of tower temperature change must be kept to a minimum. Inherent problems with larger tower water fluctuations are:

- First, the potential to drop the leaving water temperature to the chillers differential to stop Set point.
- Second, cause a crystallization detection and recovery cycle to be entered (typically lasts approximately 11 minutes after which the chiller will restart and proceed to reestablish chilled water temperature control).
- Inefficient operation because unable to maintain margin.

A cooling tower bypass or variable speed fan is recommended for stable control of the chilled water circuit.

See Figure 28.

Figure 28 – Typical Piping Instrumentation

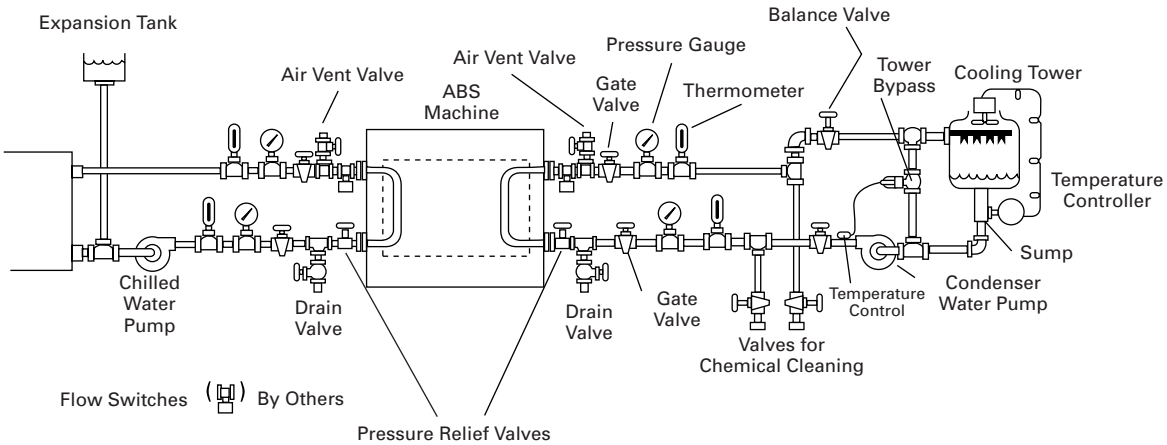

Maintenance

Tube Support Locations

Table 8 identifies the location of the internal tube supports.

Table 8 – Tube Support Locations (Inches) (See next page for millimeters)

Unit Size	Bundle	Left-Hand Tube Sheet to 1st	1-2	2-3	3-4	4-5	5-6	6-7	7-8	8-9	9-10	10-11	11-12	12-13	13-14
500	Absorber	42 7/8	42 7/8	42 7/8	42 7/8	na									
	Evaporator	42 7/8	42 7/8	42 7/8	42 7/8	na									
	Condenser	42 7/8	42 7/8	42 7/8	42 7/8	na									
	Generator	21 3/8	21 3/8	21 3/8	21 3/8	21 3/8	21 3/8	21 3/8	21 3/8	na					
600	Absorber	40 5/8	40 5/8	40 5/8	40 5/8	40 5/8	na								
	Evaporator	40 5/8	40 5/8	40 5/8	40 5/8	40 5/8	na								
	Condenser	40 5/8	40 5/8	40 5/8	40 5/8	40 5/8	na								
	Generator	20 3/8	20 3/8	20 3/8	20 3/8	20 3/8	20 3/8	20 3/8	20 3/8	20 3/8	20 3/8	na			
700	Absorber	39 ¼	39 ¼	39 ¼	39 ¼	39 ¼	39 ¼	na							
	Evaporator	39 ¼	39 ¼	39 ¼	39 ¼	39 ¼	39 ¼	na							
	Condenser	39 ¼	39 ¼	39 ¼	39 ¼	39 ¼	39 ¼	na							
	Generator	19 5/8	19 5/8	19 5/8	19 5/8	19 5/8	19 5/8	19 5/8	19 5/8	19 5/8	19 5/8	19 5/8	19 5/8	na	
800	Absorber	38 ¼	38 ¼	38 ¼	38 ¼	38 ¼	38 ¼	38 ¼	na						
	Evaporator	38 ¼	38 ¼	38 ¼	38 ¼	38 ¼	38 ¼	38 ¼	na						
	Condenser	38 ¼	38 ¼	38 ¼	38 ¼	38 ¼	38 ¼	38 ¼	na						
	Generator	19 1/8	19 1/8	19 1/8	19 1/8	19 1/8	19 1/8	19 1/8	19 1/8	19 1/8	19 1/8	19 1/8	19 1/8	19 1/8	19 1/8
975	Absorber	35 3/8	35 3/8	35 3/8	35 3/8	35 3/8	35 3/8								
	Evaporator	46	38	44 ½	38	46	na								
	Condenser	52 7/8	53	53	52 7/8	na									
	Generator	23 3/8	26 ½	26 ½	26 ½	26 ½	26 ½	26 ½	23 3/8	na					
1100	Absorber	35 ¼	35 ¼	35 ¼	24 ½	35 ¼	35 ¼	35 ¼	na						
	Evaporator	47 3/8	47 ¼	47 ¼	47 ¼	47 3/8	na								
	Condenser	47 1/8	47	47	47	47 1/8	na								
	Generator	23 5/8	23 ½	23 ½	23 ½	23 ½	23 ½	23 ½	23 ½	23 ½	23 5/8				
1225	Absorber	35	35	24 7/8	35	35	24 7/8	35	35	na					
	Evaporator	47 5/8	47 ¼	47 ¼	35 ¼	35 ¼	47 5/8	na							
	Condenser	43 1/8	43 1/8	43 1/8	43 1/8	43 1/8	43 1/8	na							
	Generator	21 9/16	21 9/16	21 9/16	21 9/16	21 9/16	21 9/16	21 9/16	21 9/16	21 9/16	21 9/16	21 9/16	21 9/16		
1350	Absorber	35 3/8	35 ½	35 ½	35 ½	35 ½	35 ½	35 ½	35 3/8	na					
	Evaporator	47 5/8	47 ¼	47 ¼	47 ¼	47 ¼	47 5/8	na							
	Condenser	47 3/8	47	47	47	47	47 5/8	na							
	Generator	23 ¾	23 5/8	23 ½	23 ½	23 ½	23 ½	23 ½	23 ½	23 ½	23 ½	23 5/8	23 ¾		

Table of Tube support locations. Column 1 indicates (inches) from left hand tube sheet to the 1st tube support, column 2 indicates inches between 1st and 2nd supports, column 3 indicates inches between 2nd to 3rd support, and so forth.

Maintenance

Table 8 – Tube Support Locations (millimeters)

Unit Size	Bundle	Left-Hand Tube Sheet to 1st	1-2	2-3	3-4	4-5	5-6	6-7	7-8	8-9	9-10	10-11	11-12	12-13	13-14
500	Absorber	1089	1089	1089	1089	na									
	Evaporator	1089	1089	1089	1089	na									
	Condenser	1089	1089	1089	1089	na									
	Generator	543	543	543	543	543	543	543	543	na					
600	Absorber	1032	1032	1032	1032	1032	n/a								
	Evaporator	1032	1032	1032	1032	1032	n/a								
	Condenser	1032	1032	1032	1032	1032	n/a								
	Generator	518	518	518	518	518	518	518	518	518	518	na			
700	Absorber	997	997	997	997	997	997	n/a							
	Evaporator	997	997	997	997	997	997	n/a							
	Condenser	997	997	997	997	997	997	n/a							
	Generator	498	498	498	498	498	498	498	498	498	498	498	498	na	
800	Absorber	972	972	972	972	972	972	972	na						
	Evaporator	972	972	972	972	972	972	972	na						
	Condenser	972	972	972	972	972	972	972	na						
	Generator	486	486	486	486	486	486	486	486	486	486	486	486	486	486
975	Absorber	899	899	899	899	899	899								
	Evaporator	1168	965	1130	965	1168	n/a								
	Condenser	1343	1346	1346	1343	na									
	Generator	594	673	673	673	673	673	673	673	na					
1100	Absorber	895	895	895	622	895	895	895	na						
	Evaporator	1203	1200	1200	1200	1203	na								
	Condenser	1197	1194	1194	1194	1197	na								
	Generator	600	597	597	597	597	597	597	597	597	600				
1225	Absorber	889	889	632	889	889	632	889	889	na					
	Evaporator	1210	1200	1200	895	895	1210	na							
	Condenser	1095	1095	1095	1095	1095	1095	na							
	Generator	548	548	548	548	548	548	548	548	548	548	548	548		
1350	Absorber	899	902	902	902	902	902	902	902	na					
	Evaporator	1210	1200	1200	1200	1200	1210	na							
	Condenser	1203	1194	1194	1194	1194	1210	na							
	Generator	603	600	597	597	597	597	597	597	597	597	600	603		

Table of Tube support locations. Column 1 indicates (mm) from left hand tube sheet to the 1st tube support, column 2 indicates mm between 1st and 2nd supports, column 3 indicates mm between 2nd to 3rd support, and so forth.

Maintenance

Periodic Purge Maintenance

The following information describes the maintenance requirements of the purge system. To assure efficient and reliable machine operation, perform all inspections and procedures at the prescribed intervals. Keep a record of all inspection results to establish proper service intervals and document changes that occur in purge activity that could reflect on chiller performance.

Purifier Purge
The following sections describe the required periodic maintenance:

Weekly
Check the vacuum pump oil quality.

Semi-Annually
Inspect the air-cooled condensing unit coil and clean as needed. Clean the coil from the fan side using compressed air or coil cleaner. A fouled coil will reduce purge efficiency and capacity.

Purge Vacuum Pump and Motor Assembly

Drive Belt Checkout and Adjustment

WARNING

Do not touch the belt while it is rotating.

Serious personal injury can result from contact with rotating parts. Turn power OFF before servicing belt.

CAUTION

Belt tension maintenance is important. Too tight or loose adjustment can cause damage to the shaft bearings. Too loose an adjustment allows the belt to slip and shorten the lifetime of the belt.

1. Check pulley alignment and V-belt tension. The belt should depress about 1/2 to 3/4" [13 to 19 mm] under light hand pressure applied to midway between the pulleys. Belt adjustments are made by loosening the motor hold-down bolts and sliding the motor toward or away from the vacuum pump as required.
2. Adjust the tension of the belt once again a week after unit operation to compensate for stretch due to break-in.
3. The adjustment of the belt tension should be made by parallel shifting of the motor. Tighten adjusting nuts or bolts securely after adjustments.
4. If required, clean the purge drive belts with an approved belt cleaner.

Periodic Checking

Check the following points periodically.

1. Check if bolts and nuts are tight.
2. Check to see if the gas ballast valve and solenoid valve is operable.
3. Check for leakage of oil from the shaft seal or pump casing.
4. Replace vacuum pump oil periodically to maintain pump performance. Check the oil turbidity through the oil level window.

Oil Replacement
Replace oil when the ultimate pressure of the pump itself is unsatisfactory or the oil becomes too dirty. Although the oil becomes somewhat dirty during operation, the pump can be operated providing an adequate suction vacuum is obtained. Milky oil indicates high moisture content. Excessive pumping and/or purging when noncondensables are not present will cause water vapor to be drawn from the chiller which condenses into the oil. Limit the use of service pumpout and verify correct ballast settings, and verify timed pumpout settings.

Replace the oil using the following procedures:

1. Warm the oil by operating the pump for approximately fifteen minutes with the intake closed. Stop the purge operation from operator setting group menu. Open the drain oil cock and drain, almost all the oil. Most of the oil will drain out freely.

WARNING

Do not touch the belt while it is rotating.

Serious personal injury can result from contact with rotating parts. Turn power OFF before servicing belt.

The small residue remaining in the pump can be forced out by turning the pump pulley by hand, with the exhaust port closed and the intake open. The oil will spurt out suddenly and should be deflected into the drain pan. Avoid extensive operation with the exhaust port sealed; excessive internal pressure may loosen the shaft seal.

WARNING

Use extreme care. The oil will be hot and can cause severe burns.

Maintenance

Oil Filling

2. After removing all oil, close the drain and pour three or four ounces of clean Duo-seal oil into the intake port. Open the exhaust port and run the pump for a short period to completely circulate the new oil. Drain the oil and force out the residue as above. Repeat flushing with new Duo-seal oil until flushing remains clean and free of color and foreign matter. One or two flushings normally cleans accumulated residue and protects the pump.

   Operate the pump and check the ultimate vacuum achievable.
3. Repeat steps 1 - 2 several times if the pump does not perform.
4. Replace the dust cap. Start the purge pump with the manual hand valve closed and allow it to operate one hour to warm the oil. Recheck the oil level with the oil at operating temperature.

Recommended Oil
Welch Duo Seal Oil, Oil-1

Once a Year
Lubricate the purge pump motor with a good grade of machine oil.

Solution Maintenance

To maintain machine efficiency, the lithium bromide solution must be analyzed periodically to determine if the inhibitor levels are within acceptable limits. A laboratory test is required to determine the inhibitor level (and other additive levels), and any necessary adjustments. To maintain the correct levels, additive and inhibitor must be added periodically to the lithium bromide solution. It is recommended that the solution be analyzed once a year if the machine is used for comfort cooling and twice a year if it is in continuous or critical. (Monitor the lapse time meter and provide this information when lithium bromide analysis is performed). Contact your local Trane Service Agency for qualified lab testing.

Air leaks will accelerate inhibitor depletion resulting in excessive hydrogen production. Since absorption machines are unable to cool effectively when excessive hydrogen is formed, machine operation under these conditions is not recommended until the leak is eliminated.

Note: This machine uses lithium bromide inhibited with lithium molybdate and lithium hydroxide. Lithium bromide that contains other inhibitors cannot be used in this equipment.

Solution Filter

Rinsing the Filter
As the filter is used to remove solids from the lithium bromide solution, some inhibited solution (lithium molybdate in the lithium bromide) will be collected with the solids. Periodically this inhibited solution must be returned to the solution for proper filter operation and before any time the filter is cleaned. Introducing refrigerant water to dilute the brine solution will return the lithium molybdate inhibited solution but not remove the filtered out solids and particles. Also, this will allow for easier filter element cleanup or changeout since the servicer will be dealing with primarily refrigerant water versus a stronger lithium bromide concentration.

The filter assembly should not be used for continuous operation. It should be periodically valved into operation as needed for cleanup purposes only. If the filter has been in operation for more than one month, the following procedure must be completed to insure proper operation and solution maintenance.

Procedure
Before opening the filter to clean or exchange elements, the following should be completed:

1. Close the inlet feed valve (LTSP on Horizon) stopping the flow of Lithium Bromide to the filter.
2. Open the refrigerant pump discharge service valve and the service valve from step 1. The purpose is to provide refrigerant flow through the filter assembly.
3. Operate the refrigerant pump for approximately 5 minutes. Do not exceed 10 minutes as this may cause excessive lost of refrigerant water. The refrigerant flow will be through the filter and returning to the brine side of the chiller. Operation of the pump for too long a period could deplete all refrigerant water. Continue procedure until the entire filter canister feels cold.
4. Close the refrigerant pump discharge valve and the filter assembly service valve.
5. Change or clean filter elements as needed. Refer to Cleaning the Filter.

Maintenance

Cleaning the Filter
Periodic cleaning of the filter is necessary. Experience has shown a new filter, versus a full or plugged filter, will have negligible differential pressure between the inlet and outlet; therefore other means of determining flow can be used, for example, a sight glass, flow meters, and so forth. The particle size rating for the cleanable filter is approximately 150 micron. The disposable filter is rated at approximately 30 microns. While these should not be considered absolute values, they do provide a range of cleanliness that the solution can attain. These ratings are based on nominal flow and will vary as flow rates vary.

To clean the filter, follow the given procedure.

Precaution: As will all chemicals, avoid getting the solution ON YOU or IN YOU. Do not eat or drink while handling the Lithium Bromide solution. The technician should use personal protective handling equipment. This should include, but not limited to, gloves for hand protection, splash goggles or safety glasses, and an apron or equivalent for body protection.

⚠ CAUTION

LITHIUM BROMIDE!

LITHIUM BROMIDE IS NORMALLY NONTOXIC; HOWEVER, OTHER CHEMICALS MIXED WITH THE SOLUTION CAN CAUSE IRRITATION AND ADDITIVE VAPORS CAN CAUSE NAUSEA. ALWAYS PROVIDE VENTILATION TO REMOVE ACCUMULATED VAPORS.

In case of accidental contact with the solution, wash the affected area with water immediately.

Precaution: Make certain that appropriate application equipment is locked and tagged-out safely, as applicable. This should include, but not limited to, pumps, motors and other devices that may affect solution flow or pressure.

1. Close the filter system isolation valves. This isolates the filter system from the unit. Servicing the filter will not affect unit operation.
2. Remove the pipe plug from the service valve located immediately next to the filter. Open the valve to break the vacuum in the filter system. A container may be necessary to catch solution draining from the valve.
3. Open the filter assembly by loosening the filter assembly bolt located in the center of the filter head. The filter may be drained prior to disassembly via the drain bolt located on the bottom of the filter tank.
4. Remove the filter tank from the filter head.
5. Clean the filter tank and the reusable filter element. The element is most effectively cleaned by backwashing with a high-pressure spray device.
6. Place the clean element in the filter tank.
7. Reassemble the filter, making sure that the o-rings are properly seated. A thin layer of silicone grease applied to the o-rings assures a leaktight seal.
8. Tighten the filter assembly bolt. This should be torqued to 50-55 ft-lbs.
9. Use the service valve located immediately next to the filter to evacuate the filter system. After evacuation, close and plug the valve.
10. Open the filter system isolation valves.

Maintenance

Pump Operational Care and Maintenance

Operation

First time operation — on initial operation or after installation or overhaul, make the following checks before putting the unit back into operation. Be sure pump is completely filled with liquid. Run unit for only a few seconds to make sure it operates smoothly. There should be no unusual vibration, grinding, or scrapping noises.

CAUTION

Do not run this unit dry. Even momentary operation without pump and motor casing filled with liquid will damage bearings.

If pump trips on overload current perform the following checks:

a. Note discharge pressure with the pump running.

b. Stop motor, but do not close or adjust valves.

c. Disconnect all power.

d. Reverse any two line leads at motor starter to reverse direction of rotation.

e. Start motor and note discharge pressure. The direction of rotation that provides the higher discharge pressure is the correct rotation.

Pump Maintenance

The solution pump should be disassembled and inspected at routine intervals. The need to inspect or service the pumps are expected to be very infrequent. The expected interval between start-up and the first parts replacement is approximately 50,000 hours of normal operation. This assumes proper solution analysis and maintenance is performed. High amounts of suspended solids may reduce the design life. Parts should be replaced as determined by a qualified Trane Service Engineer.

Since the interval between inspection and repair is quite long it is logical to replace the wearing components to a like new condition anytime that the pumps are opened. Therefore pump parts should be ordered and on hand any time the pumps are opened. Table 9 indicates items that should be inspected and the action to be taken, whenever the pumps are opened. For cutaway view of pump see Figure 29.

WARNING

Certain procedures common to refrigeration system service may expose operating and/or servicing personnel to liquid and/or vaporous refrigerant. To avoid injury or death due to skin exposure or inhalation of refrigerant, closely follow all safety procedures described in the material safety data sheet, and to all labels on refrigerant containers.

Only certified service personnel should service the refrigerant system. To avoid injury or death due to electrical shock, never open access panels to inspect or service the unit without first opening all disconnect switches.

Use caution when working on certain areas of this unit. Surface temperatures may exceed 150°F [65.1°C] on the condensing unit. Contact with bare skin could result in burns and injuries.

Table 9 – Pump Inspection Items

Item	Inspection	Action	Replace
Impeller	Balance	Remove Material to Balance	If Required
Wearing Rings	Clearance	.006/.009” Nominal [.15/.23 mm] Nominal	Replace if 2 times nominal
Bearings	Axial Wear	3/16” [4.8 mm] Maximum Allowed	X
Rotor/Journal	Scoring	Visual Check	If Scored Replace with new motor
Rotor/Stator Liners	Wear/Scrapping	Adjust/Repair/Replace	If Cannot Repair
Circulation Passages (Clean)	Clean	Check/Clean	N/A
Motor Lead Insulation	Abrasion	Shrink-wrap/Tape	If Required
Motor Windings	Megohm	Dry Out in Oven	If Required
Check All Parts	Check for Cracks/Wear	Repair or Replace	N/A

Maintenance

Solution Pumps

This section provides detail of the three pumps located on the machine. Also, this section includes motor and pump construction and pump motor cooling and lubrication.

Pumps
There are three individual pumps operating within the absorption cycle. Refer to the absorption cycle fluid schematic, Figure 3, which illustrates the fluids and piping arrangements associated with each pump.

- The low temperature solution pump (LTSP) supplies dilute lithium bromide solution from the absorber through the heat exchanger then to the low temperature generator for concentration.
- The absorber spray pump (ASP) supplies intermediate solution, which is a mixture of dilute and concentrated to the absorber sprays.
- The refrigerant pump (RP) supplies refrigerant to the evaporator sprays.

The (LTSP) and (ASP) operate at variable speeds. A solid-state adjustable frequency drive (AFD) controls motor speed in response to an analog signal provided by the unit control module. The AFD also serves as the start/stop and overcurrent device for the associated pump motors.

The refrigerant pump (RP) operates at constant speed controlled by motor starter contactors. The refrigerant pump circuit has an individual current overload protection device, and each pump has a winding temperature thermostat.

Motor and Pump Construction
The pump is a single stage, hermetically sealed, centrifugal pump designed for Absorption application. The pump and motor consists of two sections: the motor stator shell, and the pump casing. The motor and impeller can be removed from the pump casing without disturbing suction and discharge piping by first separating the two sections, then removing the motor rotor and impeller with the motor stator shell as an assembly. The rotor is supported with two self-centering bearings that are internally tapered to mate with complimentary shaped journals on motor shaft. A coil spring holds the bearings in firm contact with the journals and compensates automatically for wear.

Motor Cooling and Lubrication
Part of the pumped liquid flows from the casing volute through a spacing between the wearing ring housing and the attached bearing cap in the wearing ring housing assembly through the bearing cap flange to the cavity between the welded stator liner and rotor liner. The liquid returns to the pump suction through the hollow shaft. The liquid cools and lubricates the bearings, and carries away heat generated by the motor rotor and stator.

Maintenance

Figure 29 – Typical Pump Assembly and Recirculation Liquid Flow

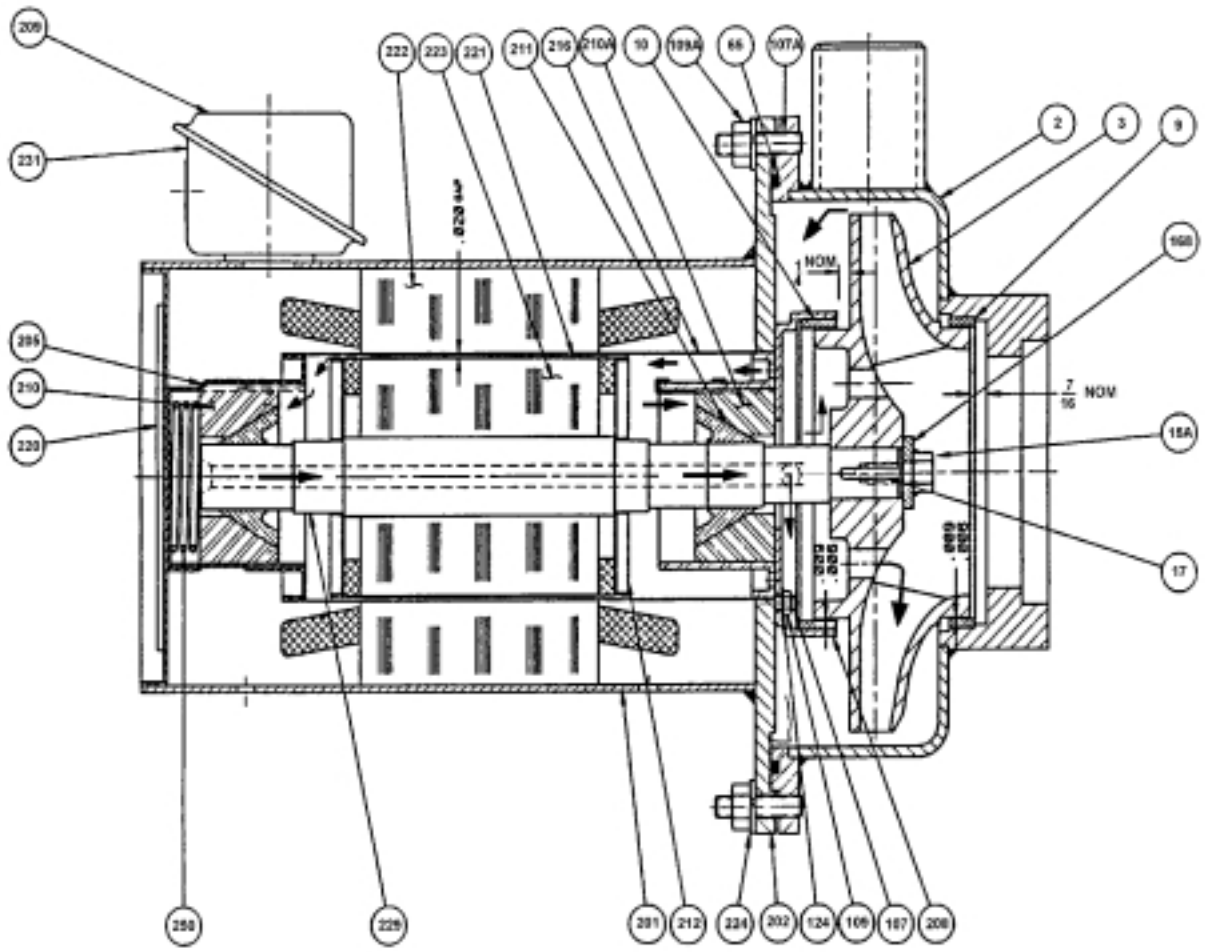

Pump Identification and Parts List

2	Casing	208	Wearing Ring Housing
3	Impeller	209	Terminal Box Cover
9	Casing Wearing Ring	210	Bearing (Front End)
10	Motor Side Wearing Ring	210A	Bearing
15A	Impeller Locking Screw	211	Bearing Journal
16B	Impeller Locking Washer	212	Rotor end Plate
17	Feather Key (Impeller)	216	Stator Liner (Can)
65	Casing Gasket	220	Nameplate
107	Stud	221	Rotor Liner
109, 109A	Nut	222	Stator Core (Winding)
124, 224	Lockwasher	223	Rotor Core
201	Motor Field Shell	229	Rotor Shaft
202	Adapter Flange	231	Terminal Box
205	Bearing Cap	250	Coil Spring

Maintenance

AFD Maintenance

Periodically, inspect the AFD as described in Table 10, to prevent accidents and to ensure high performance reliability.

WARNING

To prevent electrical shock, disconnect all power before servicing the inverter and then wait at least five minutes after the power supply is disconnected and all LED's are extinguished.

Table 10 – AFD Component Check and Corrective Action

External Terminals, Connectors, Mounting Screws, and so forth	Loose screws or connectors	Securely tighten.
Heat Sink	Build-up of dust and dirt	Blow with dry, compressed air [39.2x104 to 58.8x104 Pa (4 to 6 kg cm2) pressure]
Printed Circuit Board (PCB)	Accumulation of conductive dust or oil	Blow with dry, compressed air 39.2x104 to 58.8x104 Pa (4 to 6 kg cm2) pressure]. If dust and oil cannot be removed, replace the board.
Cooling Fan	For abnormal noise and vibration	Replace the cooling fan.
Cooling Fan	Debris on fan blades.	Blow off and wipe, if necessary.
Power Components	Accumulation of dust and dirt	Blow with dry, compressed air [39.2x104 to 58.8x104 Pa (4 to 6 kg cm2) pressure].
Smoothing Capacitor	Discoloration or odor	Replace the capacitor or the AFD.

Troubleshooting and Diagnostics

General Information

The following section contains general troubleshooting information. When an abnormal machine condition exists, the unit control panel clear language display (CLD) will indicate the condition and a brief message. Always determine the cause and perform corrective action before you restore full machine operation.

Review the indicated message and proceed to the appropriate section defined below.

Control Panel Operator Interface (Clear Language Display) Diagnostics

There are three types of diagnostics screens. They are:

"Informational Warning Only" (IFW) diagnostics that do not shutdown the chiller.

"Machine Shutdown Automatic Reset" (MAR); This diagnostic turns the MAR alarm relay ON, however the machine will automatically reset and allow restart when the condition corrects itself.

"Machine Shutdown Reset Required" (MMR); This diagnostic turns the MMR alarm relay "ON". The alarm relay turns "OFF" when the diagnostic is manually reset.

The second line of the diagnostic typically identifies additional information intended to assist the operator to define and correct problems. Contact the local Trane Service Representative for assistance when necessary.

The reason for all diagnostic must be determined and corrected. Do not reset and restart the chiller as this can cause a repeat failure.

After corrective action, the chiller can be reset and/or restarted. In the case of "Unit Shutdown - Reset Required" diagnostic types, the chiller will have to be manually reset through the Diagnostics group menu.

Note: For more information and an overview of the various types of screens see "Operators Guide: Using the control panel" (where diagnostics group menu of the clear language display (CLD) is explained.

Adjustable Frequency Drive – AFD

AFD Self-Diagnostics

The AFD controls frequency drive operation. In the case of an AFD abnormal fault conditions, the Chiller clear language display will indicate absorber spray pump, or low temp generator pump "Drive Fault." The AFD display will indicate the current fault condition. If a fault condition occurs, use the reference instruction manual and/or call the local Trane Service agency to discuss the fault and determine the cause.

Pump Troubles and Corrections

In the event that trouble occurs refer to the Troubleshooting Chart, Table 11, for a listing of the more common pump troubles and probable causes.

⚠ CAUTION

If the pump has stopped for unknown reasons, the motor may be grounded to full line voltage. Disconnect primary power before proceeding.

Troubleshooting Checklist

Probable Causes

1. Motor Incorrectly Wired. Refer to unit wiring diagram and motor wiring diagram on inside of motor terminal box cover.
2. Incorrect Motor Voltage. Voltage at motor terminals must be within 10% of motor nameplate voltage. Check voltage at load-side terminals on motor overload.
3. Fuses Blown. Replace using correct fuse size. See panel nameplate.
4. Thermal Overload Protection Open. With power removed, remove the wires from K1 and K2 and check for continuity from K1 and K2 of the motor. If circuit is open, allow motor to cool and check continuity again. If still open, call service to check motor.
5. No Current In One Line To Motor. Check voltage on all lines. Voltages must be within 10% of nameplate voltage and (current) not more than 20% unbalanced.
6. Motor Winding Grounded To Motor Frame. REMOVE ALL POWER. Contact you local Trane service representative.
7. Motor Windings Open. REMOVE ALL POWER. With motor leads disconnected, check each motor winding resistances. Values should be within 10%.
8. Foreign Object in Motor or Pump. REMOVE ALL POWER. Reconnect motor leads with any two leads interchanged: try starting the motor in reverse direction. If pump runs, reconnect to original connection and determine if pump now runs. This procedure will sometimes remove a small obstruction blocking the unit.
9. Pump Not Running. Check power supply to assure power is at line side of motor starter.
10. Impeller Clogged. Inspect impeller and remove obstructions.

Table 11 – Troubleshooting Chart

Trouble	Probable Cause (Item Number)
Pump will not start	1 2 3 4 5 6 7 8
Pump will not deliver liquid	9 10 11 12 13 14 15 17
Pump loses prime after starting	10 11 12 13 14 15 17
Capacity too low	10 11 12 13 14 15 16 17 18 19
Discharge pressure too low	10 11 12 13 14 15 16 17 18 19
Pump motor overload	1 2 5 8 10 15 16 18 20, 21
Motor overheats	1 8 15 16 17 18 19 20 21 22
Noisy installation	11 12 13 14 15 17 18 20 23 24 25 26 27 28
Excessive vibration	24, 26, 28
Excessive maintenance	2 10 11 12 13 14 15 16 17 18 20 21 22 24 26 27 28
Leakage from motor frame	29 30

11. Pump Not Completely Primed. Completely fill pump and suction line, and purge unit.
12. Air Leaks In Suction Piping. Inspect suction piping, gaskets, and fittings. Repair or replace as necessary.
13. Air Or Gases In Liquid. Purge unit, repair system to exclude non-condensables.
14. Motor Overheating. Investigate and eliminate cause of overheating.
15. System Temperature Higher Than Design Temperature. Check and correct temperature. Check machine cycle temperatures.
16. Wrong Direction Of Rotation. Reverse direction of rotation.
17. Obstruction In Piping System. Inspect piping, remove obstruction.
18. Mechanical Defects. Check for worn wearing rings, damaged impeller, worn or seized bearings, or damaged springs.
19. Speed Too Low. Check power supply and control, or excess mechanical or hydraulic loads.
20. Speed Too High. Check power supply and control, or loss of mechanical or hydraulic loads.
21. Foreign Material In Close Running Fits Of Unit. Disassemble and clean thoroughly.
22. No Fluid Flowing Through Motor. Fluid must circulate through wearing ring-housing spacing and holes in wear ring (208) and back through hollow shaft (229) to the pump suction.
23. Noise Caused By Other Equipment. Investigate and correct.
24. Loose Parts. Inspect pump. Tighten, repair, and replace as necessary.
25. Magnetic Hum Due To Electrical Input. Check for high or unbalanced voltage or broken line. Voltage must be within 10% of motor nameplate voltage and (current) not more than 20% unbalanced.
26. Mechanical Unbalance. Check with a vibration meter or by placing hand on unit. Dismantle and correct balance.
27. External Loading On Pump. Check for external mechanical stress on pump from suction and discharge piping. Adjust or add support if necessary.
28. Bearing or Spring Damaged Causing Binding. Remove, disassemble, and inspect parts.
29. Condensate Due To Change In Temperature. When subjected to changes in temperature, liquid condenses on the encapsulated stator windings and must be permitted to drain out of the condensate drain holes provided in the stator housing.
30. Hole In Stator Can. If liquid draining from pump is pumpage rather than condensate, there may be a hole in the stator can. Disassemble and inspect.

Unit Wiring Diagrams

External Electrical Connections

The electrical wiring in this section is intended to show the relationship between externally connected devices that are needed by the control panel to sequence the machine.

If there is a machine diagnostic condition occurring the main control panel clear language display will provide a message, and basic troubleshooting can be performed. The local Trane service agency can provide qualified personnel for assistance to test appropriate points within the electrical system; field wiring to the machine, or machine wiring.

Required

Inputs and outputs that must be provided are identified as Required. Required wiring is used to provide reliable machine operation. Failure to provide this wiring may cause machine failure.

Acronyms

1. Binary Output (contact closure) (BO)
2. Binary Input (BI)
3. Analog Input (4-20 mA or 2-10 Vdc) (AI)
4. Analog Output (AO)

External

The electrical connections between the machine and external devices that are not machine mounted are illustrated in Figure 30.

The chiller control system must be field wired to the items identified as REQUIRED. Other items are identified as recommended or optional.

Unit Wiring Diagrams

Required Wiring includes:		
Chilled water pump control (start and stop)	1U3-J12-1-2	BO
Chilled water pump flow switch	1TB3-9-10	BI
Condenser water flow control (start and stop)	1U3-J14-1-2	BO
Condenser water flow switch	1TB3-11-12	BI
Energy Valve	1U5-J8-1-4	BO
Steam transducer	1U3-J9-1-10	AI

Optional

Optional use inputs and outputs are identified Optional. These connection points are not required because the condition of use does not effect machine reliability or operation. Note: 1U7, 1U8, 1U9 and 1U10 are optional modules that are provided when specified on the sales order.

Optional Status Wiring (Standard):		
Limit Warning status	1U3-J20-1-2	BO
Alarm, Manual Reset required status (MMR)	1U3-J18-1-3	BO
Alarm, Auto Restart status (MMR)	1U3-J22-1-2	BO
Alarm, Purge Status	1U4-J16-1-3	BO
Output Signal		
Hot water pump flow control (start and stop)	1U3-J10-1-2	BO
Optional Input Signals (Standard):		
External auto start and stop N.C. (local auto mode required)	1U3-J5-1-2	BI
Emergency Stop N.C. (Manual reset required)	1U3-J5-3-4	BI
Outdoor air temperature sensor for CWR	1U3-J5-5-6	
External Chiller Capacity Limit Enable	(Jumper (1U3-J7 1 to 2) Closed = Enable)	BI
External Chiller Capacity Limit Analog Input	1U3-J7 11 (-) to 12 (+)	AI

Optional Modules not Provided Unless Specified on the Sales Order

1U7 – Options Module

1U8 – Tracer Communications Module

Options Module required for the following:

Optional Status:		
Maximum Capacity status	1U7-J14-1-2	BO
Optional Control:		
Tracer controlled relay	1U7-J18-1-3	BO
Tower Temporary Low Relay	1U7-J20-1-2	BO
Optional Inputs:		
Tracer temperature sensor	1U7-J7-7-8	
External Chiller water Set point isolated 2-10 Vdc or 4-20 mA	1U7-J9-4-5	AI
Optional Output		
Steam or Hot Water Valve Energy Valve Monitor Output	1U7-J7-1-2	AO

Optional modules for communications outside of main unit control panel.

1U8 Tracer Communications module	
Required for Comm. with Tracer	1U8-J3-1-2

Unit Wiring Diagrams

Figure 30 – Field Wiring Connection Diagram – Detail of Control Panel Connection Points

⚠ WARNING	⚠ AVERTISSEMENT	⚠ CAUTION
HAZARDOUS VOLTAGE! DISCONNECT ALL ELECTRIC POWER INCLUDING REMOTE DISCONNECTS BEFORE SERVICING. FAILURE TO DISCONNECT POWER BEFORE SERVICING CAN CAUSE SEVERE PERSONAL INJURY OR DEATH.	VOLTAGE HASARDEUX! DECONNECTEZ TOUTES LES SOURCES ELECTRIQUES INCLUANT LES DISJONCTEURS SITUES A DISTANCE AVANT D'EFFECTUER L'ENTRETIEN. FAUTE DE DECONNECTER LA SOURCE ELECTRIQUE AVANT D'EFFECTUER L'ENTRETIEN PEUT ENTRAINER DES BLESSURES CORPORELLES SEVERES OU LA MORT.	USE COPPER CONDUCTORS ONLY! UNIT TERMINALS ARE NOT DESIGNED TO ACCEPT OTHER TYPES OF CONDUCTORS. FAILURE TO DO SO MAY CAUSE DAMAGE TO THE EQUIPMENT.

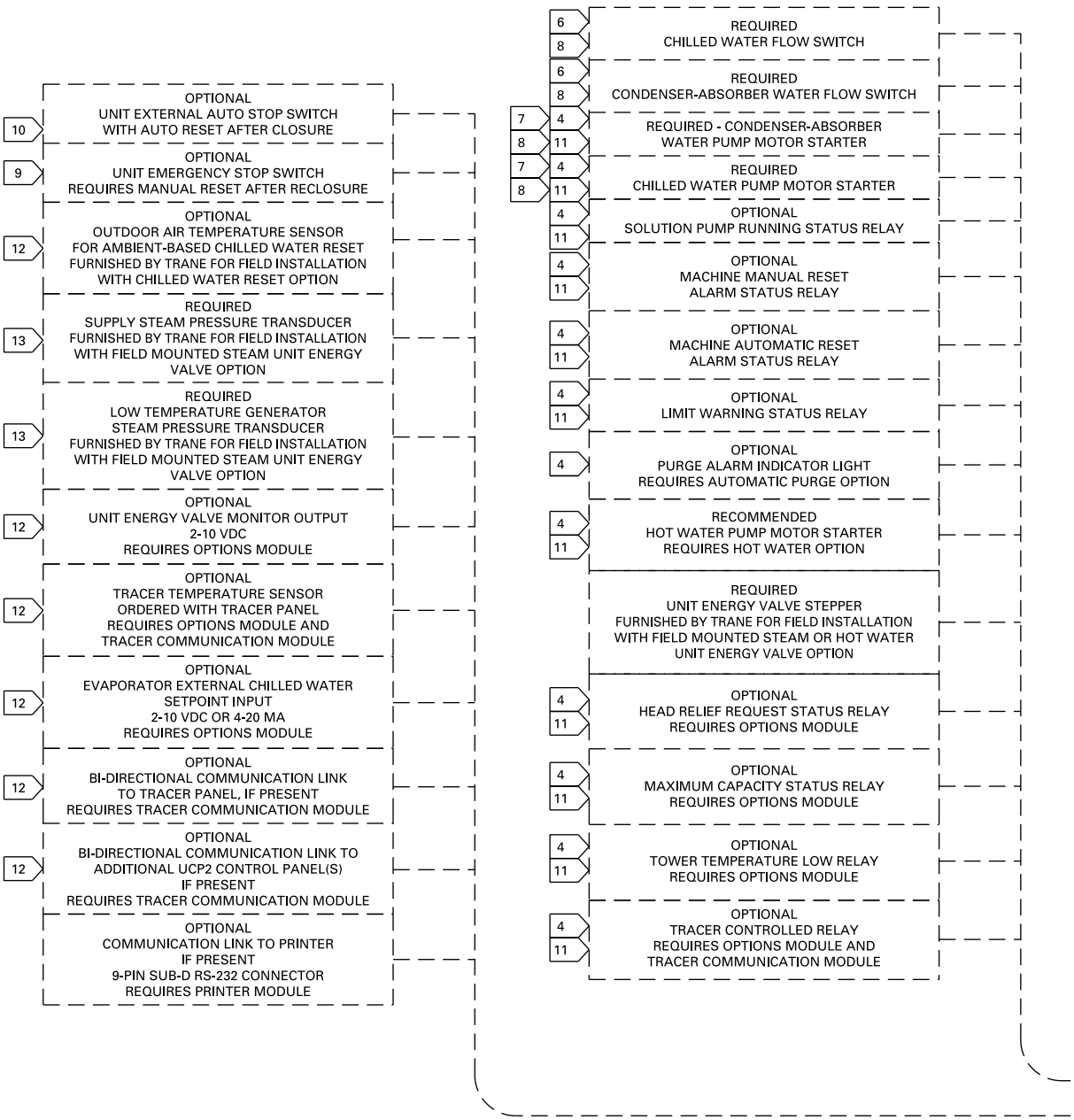

REFER TO NOTES AND DRAWING ON NEXT PAGE

Unit Wiring Diagrams

GENERAL NOTES:

1. THIS DRAWING IS TO BE USED FOR THE PURPOSE OF ESTIMATING FIELD WIRING REQUIREMENTS. CHECK SALES ORDER TO DETERMINE WHICH OPTIONS ARE SPECIFIED AND REFER TO FIELD CONNECTION WIRING DIAGRAM FOR ACTUAL FIELD WIRING REQUIRED. DASHED LINES INDICATE DEVICES AND FIELD WIRING SUPPLIED BY CUSTOMER.
2. ALL FIELD WIRING MUST BE IN ACCORDANCE WITH THE NATIONAL ELECTRIC CODE OR STATE AND LOCAL REQUIREMENTS WHICH APPLY. ALL CUSTOMER CONTROL CIRCUIT WIRING MUST HAVE A MINIMUM RATING OF 150 VOLTS.

3 DO NOT ROUTE LOW VOLTAGE (30 VDC MAXIMUM) WIRING IN THE SAME CONDUIT AS CONTROL VOLTAGE (115 VAC) WIRING AND DO NOT POWER-UP UNIT UNTIL CHECK-OUT AND START-UP PROCEDURES HAVE BEEN COMPLETED.

4 THE MAIN UNIT CONTROL PANEL PROVIDES A CONTACT CLOSURE TO CONTROL THE INDICATED CUSTOMER CONNECTED DEVICE. CUSTOMER TO PROVIDE 115 VAC POWER TO EACH DEVICE. MAXIMUM FUSE SIZE IS 15 AMPS.

REQUIRED WIRING NOTES:

5 TRANE PROVIDES A TERMINAL BLOCK, FUSED OR NON-FUSED DISCONNECT SWITCH OR A CIRCUIT BREAKER IN THE MAIN UNIT CONTROL PANEL FOR LINE VOLTAGE CONNECTION WHICH REQUIRES THE USE OF COPPER CONDUCTORS ONLY. CHECK SALES ORDER TO DETERMINE WHICH OPTION IS SPECIFIED. WIRING SIZED PER NATIONAL ELECTRIC CODE BASED ON NAMEPLATE MINIMUM CIRCUIT AMPACITY RATING.

6 EVAPORATOR AND CONDENSER FLOW SWITCHES ARE TO BE INSTALLED AND WIRED TO THE MAIN UNIT CONTROL PANEL BY THE INSTALLING CONTRACTOR. THE PURCHASE OF FLOW SWITCHES FROM TRANE IS OPTIONAL. EACH FLOW SWITCH CIRCUIT REQUIRES TWO WIRES, 115 VAC. MINIMUM CONTACT RATING AT 115 VAC IS 4.8 MA.

7 CHILLED AND CONDENSER-ABSORBER WATER FLOW MUST BE PROVEN PRIOR TO CHILLER OPERATION. CONDENSER-ABSORBER WATER PUMP MUST BE CONTROLLED BY THE MAIN UNIT CONTROL PANEL FOR CHILLER SAFETY.

8 CIRCUIT REQUIRES TWO WIRES, 115 VAC. MAXIMUM MODULE CONTACT RATING AT 115 VAC OR 30 VDC IS 2.88 AMPS INDUCTIVE, 1/3 HP.

OPTIONAL WIRING NOTES:

9 OPTIONAL CONTROL FOR A CUSTOMER SPECIFIED OR INSTALLED LATCHING TRIPOUT. THE CHILLER WILL RUN NORMALLY WHEN THE CONTACT IS CLOSED AND TRIP THE CHILLER OFF WITH A MANUALLY RESETTABLE DIAGNOSTIC WHEN THE CONTACT OPENS. MANUAL RESET IS ACCOMPLISHED WITH THE DIAGNOSTIC KEY ON THE FRONT OF THE MAIN UNIT CONTROL PANEL. CUSTOMER SUPPLIED SILVER CONTACTS ARE REQUIRED FOR 24 VDC, 12 MA RESISTIVE LOAD. CIRCUIT REQUIRES TWO WIRES, 30 VDC MAXIMUM. DO NOT ROUTE IN CONDUIT WITH HIGHER VOLTAGE CIRCUITS.

10 OPTIONAL CONTROL FOR A CUSTOMER SPECIFIED OR INSTALLED REMOTE AUTO-STOP FUNCTION. THE CHILLER WILL RUN NORMALLY WHEN THE CONTACT IS CLOSED AND STOP THE CHILLER WHEN THE CONTACT OPENS. RECLOSURE OF THE CONTACT WILL PERMIT THE CHILLER TO AUTOMATICALLY RETURN TO NORMAL OPERATION. CUSTOMER SUPPLIED SILVER CONTACTS ARE REQUIRED FOR 24 VDC, 12 MA RESISTIVE LOAD. CIRCUIT REQUIRES TWO WIRES, 30 VDC MAXIMUM. DO NOT ROUTE IN CONDUIT WITH HIGHER VOLTAGE CIRCUITS.

11 CIRCUIT REQUIRES TWO WIRES, 115 VAC. NORMALLY OPEN MAXIMUM MODULE CONTACT RATING AT 115 VAC OR 30 VDC IS 2.88 AMPS INDUCTIVE, 1/3 HP.

12 CIRCUIT REQUIRES SHIELDED WIRE PAIR, 30 VDC MAXIMUM. BELDON TYPE 8760 RECOMMENDED. MAXIMUM LENGTH OF 5000 FEET.

13 TRANE PROVIDES STEAM PRESSURE TRANSDUCER SHIELDED CABLE ASSEMBLIES FOR FIELD INSTALLATION BY CUSTOMER.

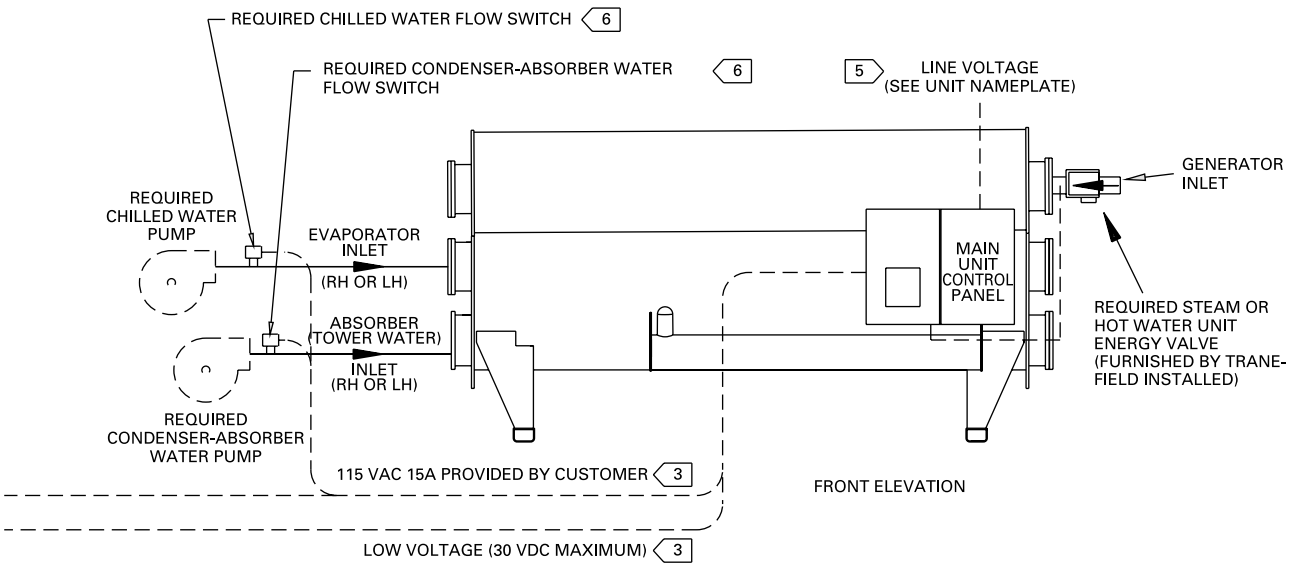

Unit Wiring Diagrams

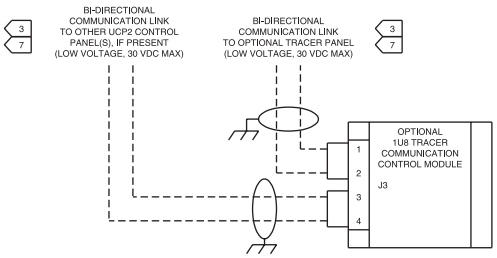

NOTES:

1. DASHED LINES INDICATE FIELD WIRING BY CUSTOMER. CHECK SALES ORDER TO DETERMINE WHICH OPTIONS ARE SPECIFIED.

2. ALL FIELD WIRING MUST BE IN ACCORDANCE WITH THE NATIONAL ELECTRIC CODE AND STATE AND LOCAL REQUIREMENTS. OUTSIDE OF THE UNITED STATES, OTHER COUNTRIES APPLICABLE NATIONAL AND/OR LOCAL REQUIREMENTS SHALL APPLY. ALL CUSTOMER CONTROL CIRCUIT WIRING MUST HAVE A MINIMUM RATING OF 150 VOLTS.

3 DO NOT ROUTE LOW VOLTAGE (30 VDC MAX) WITH CONTROL VOLTAGE (115 VAC) AND DO NOT POWER-UP UNIT UNTIL CHECK-OUT AND START-UP PROCEDURES HAVE BEEN COMPLETED.

4 CHILLED AND CONDENSER-ABSORBER WATER FLOW SWITCHES ARE TO BE INSTALLED AND WIRED TO THE MAIN UNIT CONTROL PANEL BY CUSTOMER. THE PURCHASE OF FLOW SWITCHES FROM TRANE IS OPTIONAL.

5 TERMINAL BLOCK IS SHOWN. CIRCUIT BREAKER, FUSED OR NON-FUSED DISCONNECT SWITCH IS OPTIONAL. CHECK SALES ORDER TO DETERMINE WHICH OPTION IS SPECIFIED. LINE VOLTAGE CONNECTIONS REQUIRE THE USE OF COPPER CONDUCTORS ONLY. WIRING TO BE SIZED PER THE NATIONAL ELECTRIC CODE BASED ON UNIT NAMEPLATE MINIMUM CIRCUIT AMPACITY RATING.

6 ANY COMBINATION OF SENSOR AND RELAY CIRCUITS SHOWN WIRED TO THE 1U7 OPTIONS MODULE MAY BE MADE IF THE OPTIONS MODULE OPTION IS SPECIFIED ON THE SALES ORDER.

7 BI-DIRECTIONAL COMMUNICATION LINKS TO BE A SHIELDED, TWISTED WIRE PAIR.

8 STANDARD STEAM OR HOT WATER UNIT ENERGY VALVE AND STEAM PRESSURE TRANSDUCERS SHOWN ARE PROVIDED BY TRANE FOR FIELD INSTALLATION AND WIRING BY CUSTOMER. A FACTORY INSTALLED AND WIRED STEAM UNIT ENERGY VALVE AND STEAM PRESSURE TRANSDUCERS ARE AVAILABLE AS AN OPTION.

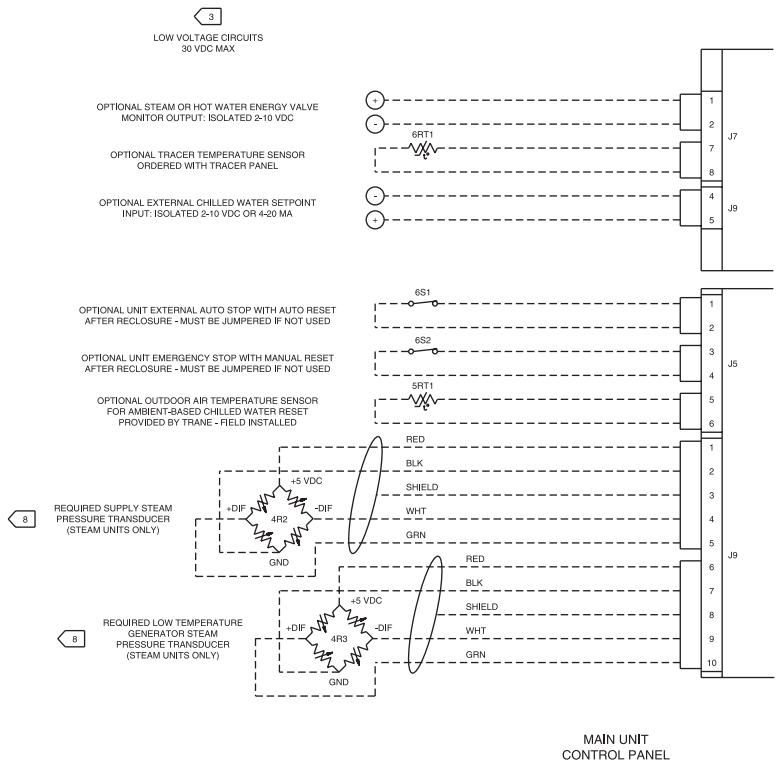

⚠ WARNING

HAZARDOUS VOLTAGE!

DISCONNECT ALL ELECTRIC POWER INCLUDING REMOTE DISCONNECTS BEFORE SERVICING.

FAILURE TO DISCONNECT POWER BEFORE SERVICING CAN CAUSE SEVERE PERSONAL INJURY OR DEATH.

⚠ AVERTISSEMENT

VOLTAGE HASARDEUX!

DECONNECTEZ TOUTES LES SOURCES ELECTRIQUES INCLUANT LES DISJONCTEURS SITUES A DISTANCE AVANT D'EFFECTUER L'ENTRETIEN.

FAUTE DE DECONNECTER LA SOURCE ELECTRIQUE AVANT D'EFFECTUER L'ENTRETIEN PEUT ENTRAINER DES BLESSURES CORPORELLES SEVERES OU LA MORT.

⚠ CAUTION

USE COPPER CONDUCTORS ONLY!

UNIT TERMINALS ARE NOT DESIGNED TO ACCEPT OTHER TYPES OF CONDUCTORS.

FAILURE TO DO SO MAY CAUSE DAMAGE TO THE EQUIPMENT.

Unit Wiring Diagrams

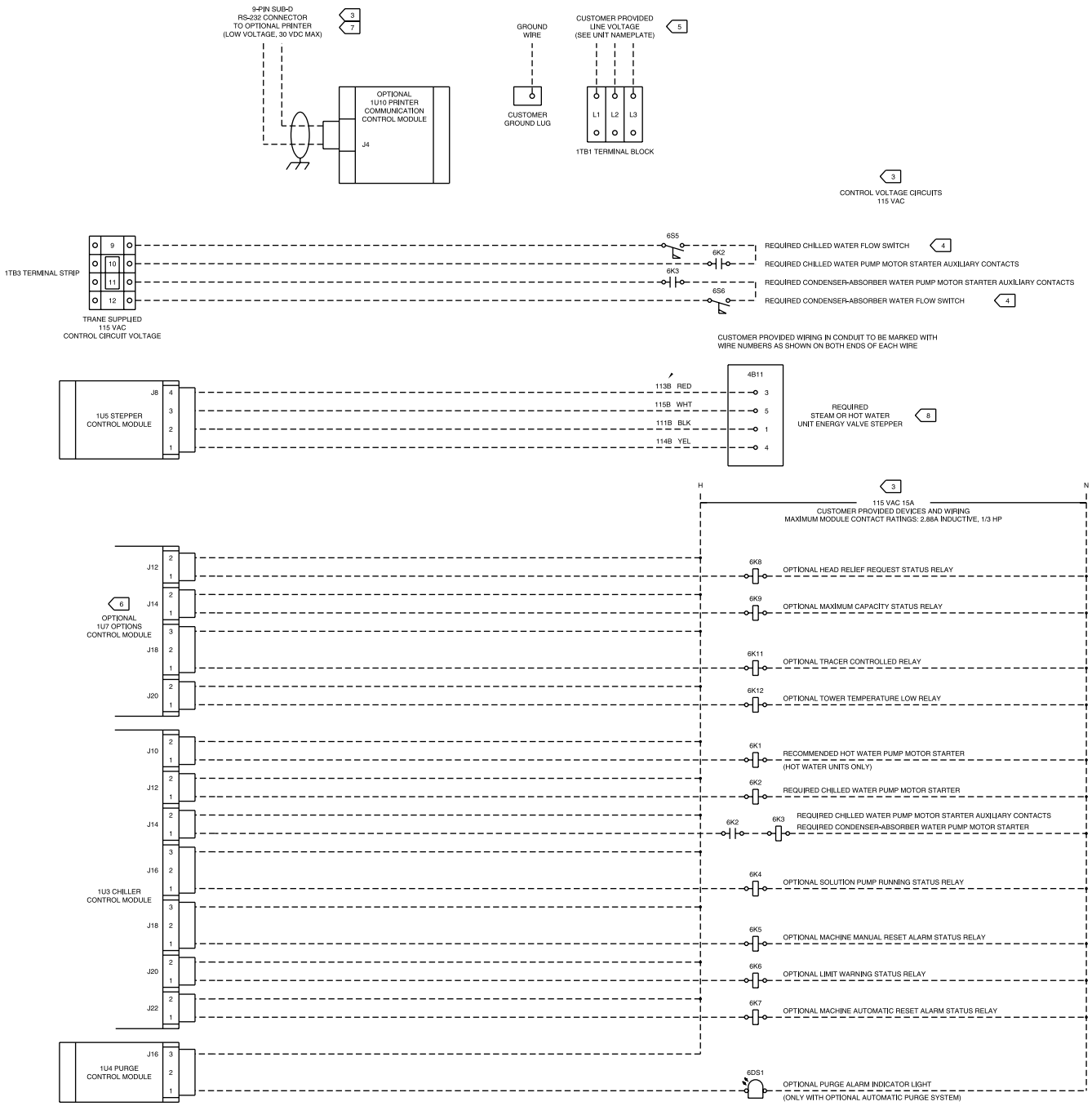

Unit Wiring Diagrams

The chiller control panel requires proof of water flow for both evaporator (chilled) and absorber condenser circuits. A flow switch and motor starter auxiliary contact connections satisfy this requirement. This input must be hard wired to the chiller control system. The flow switch must be set to open when flow drops to 70% or below of design evaporator flow.

⚠ CAUTION

The control panel is designed with a contact closure used for control of the water pump operation. The evaporator and condenser water pumps are electrically interlocked and sequenced by the control panel. Proof of both chilled and condenser water flow must be provided to the control panel. Under no conditions can chiller operation be terminated by stopping chilled water flow. Under no situation can condenser water flow exist without chilled water flow.

The above interlocking arrangement assures proper sequence of operation, and helps provide protection against mechanical failure from improper operation.

Required Absorber and Condenser Water Flow Control
The chiller requires start and stop control of the absorber and condenser water flow. The condenser pump motor starter and water flow control signal must be hard wired in series with the chiller panel output contacts provided. Condenser water flow must start and stop as determined by the control panel. Failure to stop flow risks evaporator freeze-up.

⚠ CAUTION

Damage caused by operation without proper water pump and flow sensing interlocking is not warranteed.

Required Chilled Water Flow Control
The chiller requires start and stop control of the chilled water flow. The chiller controls also provide a chilled water pump off delay feature. Under no conditions can chiller operation be terminated by stopping chilled water flow. For remote start/stop control, always use the auto/start/stop input of the chiller and allow chilled water flow to continue up to thirty minutes after termination of the machine dilution cycle.

Table and Figures
Tables 12 and 13 provide electrical data by voltage and unit size.

Table 14 identifies electrical devices and their description.

Figures 32 to 35 illustrate typical machine wiring and field connected wiring. These schematics are typical, therefore, refer to the schematic diagrams supplied with the particular chiller control panel that reflect the actual wiring “as built.”

Figures 36 to 40 illustrate connection points of unit and control panel wiring.

Unit Wiring Diagrams

Table 12 – ABSD 500-1350 Ton – 50 Hertz Electrical Data

Unit Size	Voltage	4B1 Refrigerant Pump Motor			4B2 Absorber Spray Pump Motor			4B3 Low Temperature Solution Pump Motor			Total Motor Rating			Control Circuit Amps	Minimum Circuit Ampacity	Maximum Fuse Size
		FLA	HP	KW	FLA	HP	KW	FLA	HP	KW	FLA	HP	KW			
500	190	12.0	3.0	2.3	25.0	5.0	3.7	25.0	5.0	3.7	62.0	13.0	9.7	10.5	79	80
	220	10.4	3.0	2.3	21.0	5.0	3.7	21.0	5.0	3.7	52.4	13.0	9.7	9.1	67	70
	380	6.0	3.0	2.3	12.0	5.0	3.7	12.0	5.0	3.7	30.0	13.0	9.7	5.3	38	40
	415	5.5	3.0	2.3	11.0	5.0	3.7	11.0	5.0	3.7	27.5	13.0	9.7	4.8	35	35
600	190	12.0	3.0	2.3	25.0	5.0	3.7	25.0	5.0	3.7	62.0	13.0	9.7	10.5	79	80
	220	10.4	3.0	2.3	21.0	5.0	3.7	21.0	5.0	3.7	52.4	13.0	9.7	9.1	67	70
	380	6.0	3.0	2.3	12.0	5.0	3.7	12.0	5.0	3.7	30.0	13.0	9.7	5.3	38	40
	415	5.5	3.0	2.3	11.0	5.0	3.7	11.0	5.0	3.7	27.5	13.0	9.7	4.8	35	35
700	190	12.0	3.0	2.3	30.0	7.5	5.6	25.0	5.0	3.7	67.0	15.5	11.6	10.5	85	90
	220	10.4	3.0	2.3	26.0	7.5	5.6	21.0	5.0	3.7	57.4	15.5	11.6	9.1	73	80
	380	6.0	3.0	2.3	15.0	7.5	5.6	12.0	5.0	3.7	33.0	15.5	11.6	5.3	42	45
	415	5.5	3.0	2.3	14.0	7.5	5.6	11.0	5.0	3.7	30.5	15.5	11.6	4.8	39	40
800	190	12.0	3.0	2.3	30.0	7.5	5.6	25.0	5.0	3.7	67.0	15.5	11.6	10.5	85	90
	220	10.4	3.0	2.3	26.0	7.5	5.6	21.0	5.0	3.7	57.4	15.5	11.6	9.1	73	80
	380	6.0	3.0	2.3	15.0	7.5	5.6	12.0	5.0	3.7	33.0	15.5	11.6	5.3	42	45
	415	5.5	3.0	2.3	14.0	7.5	5.6	11.0	5.0	3.7	30.5	15.5	11.6	4.8	39	40
975	190	25.0	5.0	3.7	25.0	5.0	3.7	30.0	7.5	5.6	80.0	17.5	13.0	10.5	98	100
	220	21.0	5.0	3.7	21.0	5.0	3.7	26.0	7.5	5.6	68.0	17.5	13.0	9.1	84	90
	380	12.0	5.0	3.7	12.0	5.0	3.7	15.0	7.5	5.6	39.0	17.5	13.0	5.3	48	50
	415	11.0	5.0	3.7	11.0	5.0	3.7	14.0	7.5	5.6	36.0	17.5	13.0	4.8	44	45
1100	190	25.0	5.0	3.7	30.0	7.5	5.6	30.0	7.5	5.6	85.0	20.0	14.9	10.5	103	110
	220	21.0	5.0	3.7	26.0	7.5	5.6	26.0	7.5	5.6	73.0	20.0	14.9	9.1	89	90
	380	12.0	5.0	3.7	15.0	7.5	5.6	15.0	7.5	5.6	42.0	20.0	14.9	5.3	51	60
	415	11.0	5.0	3.7	14.0	7.5	5.6	14.0	7.5	5.6	39.0	20.0	14.9	4.8	47	50
1225	190	25.0	5.0	3.7	30.0	7.5	5.6	30.0	7.5	5.6	85.0	20.0	14.9	10.5	103	110
	220	21.0	5.0	3.7	26.0	7.5	5.6	26.0	7.5	5.6	73.0	20.0	14.9	9.1	89	90
	380	12.0	5.0	3.7	15.0	7.5	5.6	15.0	7.5	5.6	42.0	20.0	14.9	5.3	51	60
	415	11.0	5.0	3.7	14.0	7.5	5.6	14.0	7.5	5.6	39.0	20.0	14.9	4.8	47	50
1350	190	25.0	5.0	3.7	30.0	7.5	5.6	30.0	7.5	5.6	85.0	20.0	14.9	10.5	103	110
	220	21.0	5.0	3.7	26.0	7.5	5.6	26.0	7.5	5.6	73.0	20.0	14.9	9.1	89	90
	380	12.0	5.0	3.7	15.0	7.5	5.6	15.0	7.5	5.6	42.0	20.0	14.9	5.3	51	60
	415	11.0	5.0	3.7	14.0	7.5	5.6	14.0	7.5	5.6	39.0	20.0	14.9	4.8	47	50

Unit Wiring Diagrams

Table 13 – ABSD 500-1350 Ton – 60 Hertz Electrical Data

Unit Size	Voltage	4B1 Refrigerant Pump Motor			4B2 Absorber Spray Pump Motor			4B3 Low Temperature Solution Pump Motor			Total Motor Rating			Control Circuit Amps	Minimum Circuit Ampacity	Maximum Fuse Size
		FLA	HP	KW	FLA	HP	KW	FLA	HP	KW	FLA	HP	KW			
500	200	13.0	3.0	2.3	28.0	5.0	3.7	28.0	5.0	3.7	69.0	13.0	9.7	10.0	86	90
	230	12.0	3.0	2.3	24.0	5.0	3.7	24.0	5.0	3.7	60.0	13.0	9.7	8.7	75	80
	460	6.0	3.0	2.3	12.0	5.0	3.7	12.0	5.0	3.7	30.0	13.0	9.7	4.4	37	40
	575	5.0	3.0	2.3	10.0	5.0	3.7	10.0	5.0	3.7	25.0	13.0	9.7	3.5	31	35
600	200	13.0	3.0	2.3	28.0	5.0	3.7	28.0	5.0	3.7	69.0	13.0	9.7	10.0	86	90
	230	12.0	3.0	2.3	24.0	5.0	3.7	24.0	5.0	3.7	60.0	13.0	9.7	8.7	75	80
	460	6.0	3.0	2.3	12.0	5.0	3.7	12.0	5.0	3.7	30.0	13.0	9.7	4.4	37	40
	575	5.0	3.0	2.3	10.0	5.0	3.7	10.0	5.0	3.7	25.0	13.0	9.7	3.5	31	35
700	200	28.0	5.0	3.7	34.0	7.5	5.6	28.0	5.0	3.7	90.0	17.5	13.0	10.0	109	110
	230	24.0	5.0	3.7	30.0	7.5	5.6	24.0	5.0	3.7	78.0	17.5	13.0	8.7	94	100
	460	12.0	5.0	3.7	15.0	7.5	5.6	12.0	5.0	3.7	39.0	17.5	13.0	4.4	47	50
	575	10.0	5.0	3.7	12.0	7.5	5.6	10.0	5.0	3.7	32.0	17.5	13.0	3.5	39	40
800	200	28.0	5.0	3.7	34.0	7.5	5.6	28.0	5.0	3.7	90.0	17.5	13.0	10.0	109	110
	230	24.0	5.0	3.7	30.0	7.5	5.6	24.0	5.0	3.7	78.0	17.5	13.0	8.7	94	100
	460	12.0	5.0	3.7	15.0	7.5	5.6	12.0	5.0	3.7	39.0	17.5	13.0	4.4	47	50
	575	10.0	5.0	3.7	12.0	7.5	5.6	10.0	5.0	3.7	32.0	17.5	13.0	3.5	39	40
975	200	28.0	5.0	3.7	28.0	5.0	3.7	34.0	7.5	5.6	90.0	17.5	13.0	10.0	109	110
	230	24.0	5.0	3.7	24.0	5.0	3.7	30.0	7.5	5.6	78.0	17.5	13.0	8.7	94	100
	460	12.0	5.0	3.7	12.0	5.0	3.7	15.0	7.5	5.6	39.0	17.5	13.0	4.4	47	50
	575	10.0	5.0	3.7	10.0	5.0	3.7	12.0	7.5	5.6	32.0	17.5	13.0	3.5	39	40
1100	200	28.0	5.0	3.7	34.0	7.5	5.6	34.0	7.5	5.6	96.0	20.0	14.9	10.0	115	125
	230	24.0	5.0	3.7	30.0	7.5	5.6	30.0	7.5	5.6	84.0	20.0	14.9	8.7	100	110
	460	12.0	5.0	3.7	15.0	7.5	5.6	15.0	7.5	5.6	42.0	20.0	14.9	4.4	50	60
	575	10.0	5.0	3.7	12.0	7.5	5.6	12.0	7.5	5.6	34.0	20.0	14.9	3.5	41	45
1225	200	28.0	5.0	3.7	34.0	7.5	5.6	34.0	7.5	5.6	96.0	20.0	14.9	10.0	115	125
	230	24.0	5.0	3.7	30.0	7.5	5.6	30.0	7.5	5.6	84.0	20.0	14.9	8.7	100	110
	460	12.0	5.0	3.7	15.0	7.5	5.6	15.0	7.5	5.6	42.0	20.0	14.9	4.4	50	60
	575	10.0	5.0	3.7	12.0	7.5	5.6	12.0	7.5	5.6	34.0	20.0	14.9	3.5	41	45
1350	200	28.0	5.0	3.7	34.0	7.5	5.6	34.0	7.5	5.6	96.0	20.0	14.9	10.0	115	125
	230	24.0	5.0	3.7	30.0	7.5	5.6	30.0	7.5	5.6	84.0	20.0	14.9	8.7	100	110
	460	12.0	5.0	3.7	15.0	7.5	5.6	15.0	7.5	5.6	42.0	20.0	14.9	4.4	50	60
	575	10.0	5.0	3.7	12.0	7.5	5.6	12.0	7.5	5.6	34.0	20.0	14.9	3.5	41	45

Unit Wiring Diagrams

Figure 32 – ABSD Horizon Single-Stage Steam or Hot Water Absorption with Adjustable Frequency Drives – Main Power Connection, Starter Control Module and Pump Motors

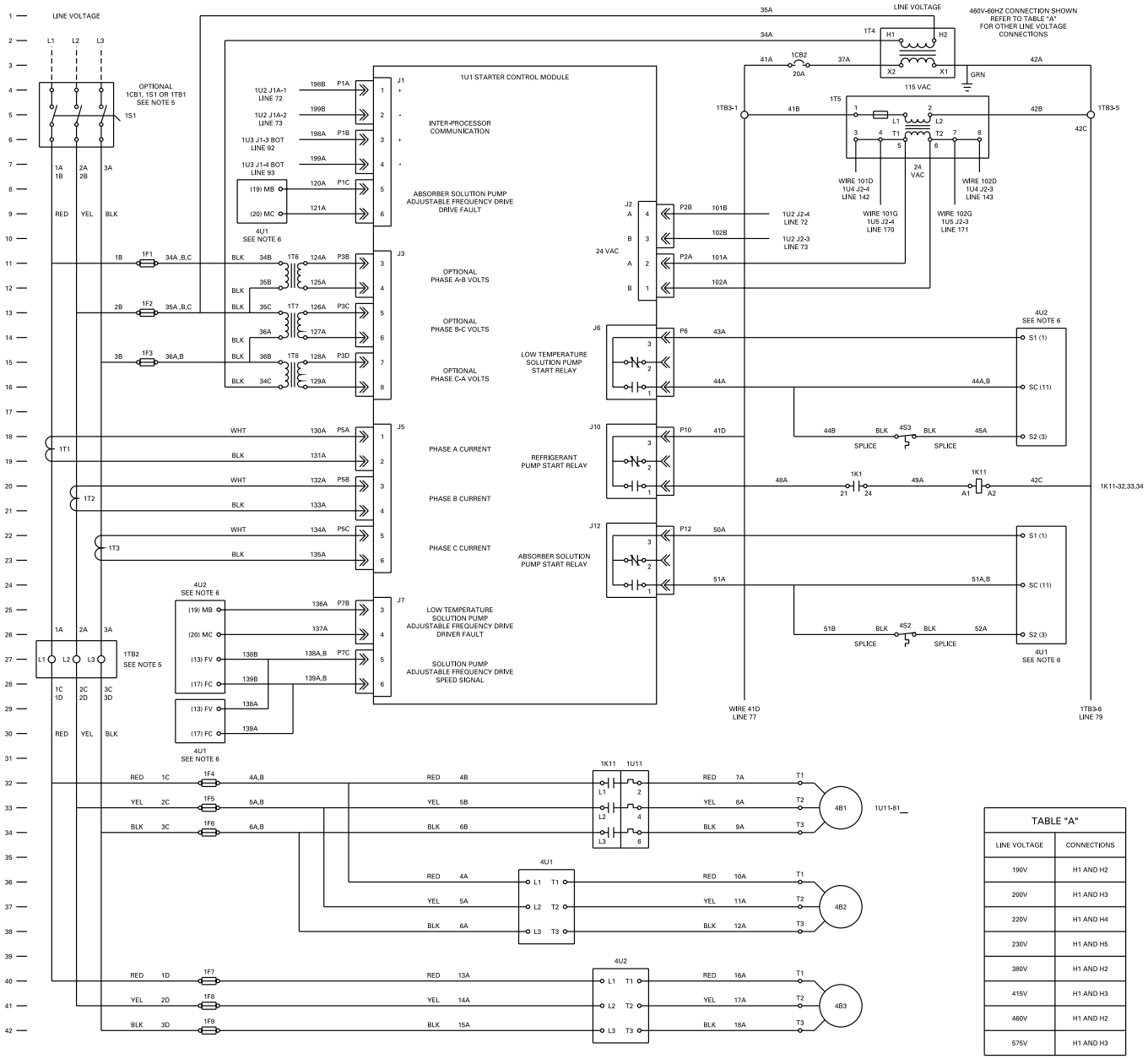

TABLE "A"	
LINE VOLTAGE	CONNECTIONS
190V	H1 AND H2
200V	H1 AND H3
220V	H1 AND H4
230V	H1 AND H5
380V	H1 AND H2
415V	H1 AND H3
460V	H1 AND H2
575V	H1 AND H3

Unit Wiring Diagrams

Table 14

DEVICE	DEVICE DESCRIPTION	PAGE NO
1CB1	LINE VOLTAGE CIRCUIT BREAKER	1
1CB2	LINE VOLTAGE TRANSFORMER CIRCUIT BREAKER	1
1F1,1F2	LINE VOLTAGE TRANSFORMER FUSES	1
1F3	PHASE VOLTAGE TRANSFORMER FUSE	1
1F4,1F5,1F6	REFRIGERANT AND ABSORBER SOLUTION PUMP MOTOR FUSES	1
1F7,1F8,1F9	LOW TEMP SOLUTION PUMP MOTOR FUSES	1
1K1	REFRIGERANT PUMP ABNORMAL RELAY	1,2
1K6	PURGE VACUUM PUMP RELAY	3
1K11	REFRIGERANT PUMP CONTACTOR	1
1S1	LINE VOLTAGE FUSED OR NON-FUSED DISCONNECT SWITCH	1
1T1,1T2,1T3	PHASE CURRENT TRANSFORMERS	1
1T4	LINE VOLTAGE TRANSFORMER	1
1T5	CONTROL VOLTAGE TRANSFORMER	1
1T6,1T7,1T8	UNDER-OVER PHASE VOLTAGE TRANSFORMERS	1
1TB1	LINE VOLTAGE TERMINAL BLOCK	1
1TB2	PUMP MOTOR TERMINAL BLOCK	1
1TB3	UCP2 CONTROL PANEL MOUNTED TERMINAL STRIP	1,2,3
1U1	STARTER CONTROL MODULE	1
1U2	CIRCUIT CONTROL MODULE	2
1U3	CHILLER CONTROL MODULE	2
1U4	PURGE CONTROL MODULE	3
1U5	STEPPER CONTROL MODULE	3
1U6	LOCAL CLEAR LANGUAGE DISPLAY PANEL	3
1U7	OPTIONS CONTROL MODULE	4
1U8	TRACER COMMUNICATION CONTROL MODULE	4
1U10	PRINTER COMMUNICATION CONTROL MODULE	4
1U11	REFRIGERANT PUMP OVERLOAD	1,2
4B1	REFRIGERANT PUMP MOTOR	1
4B2	ABSORBER SOLUTION PUMP MOTOR	1
4B3	LOW TEMP SOLUTION PUMP MOTOR	1
4B6	REFRIGERANT DUMP VALVE ACTUATOR	2
4B9	PURGE REFRIGERANT COMPRESSOR MOTOR	3
4B10	PURGE VACUUM PUMP MOTOR	3
4B11	STEAM OR HOT WATER ENERGY VALVE STEPPER	3
4JB3	PURGE REFRIGERANT COMPRESSOR JUNCTION BOX	3
4L18	PURGE TANK VALVE SOLENOID	3
4L19	PURGE PUMPOUT SOLENOID	3
4L20	ABSORBER VALVE	3
4R2	SUPPLY STEAM PRESSURE TRANSDUCER	2
4R3	LOW TEMP GENERATOR STEAM PRESSURE TRANSDUCER	2
4R4	EVAPORATOR DIFFERENTIAL WATER PRESSURE TRANSDUCER	4
4R5	COND AND ABS DIFFERENTIAL WATER PRESSURE TRANSDUCER	4

DEVICE	DEVICE DESCRIPTION	PAGE NO
4RT1	SENSING DETECTION AND RECOVERY TEMP SENSOR	2
4RT6	EVAPORATOR ENTERING WATER TEMP SENSOR	2
4RT7	EVAPORATOR LEAVING WATER TEMP SENSOR	2
4RT8	ABSORBER LEAVING WATER TEMP SENSOR	2
4RT9	CONDENSER LEAVING WATER TEMP SENSOR	2
4RT10	ABSORBER ENTERING WATER TEMP SENSOR	2
4RT11	PURGE REFRIGERANT COMPRESSOR SUCTION TEMP SENSOR	3
4RT12	SATURATED EVAPORATOR REFRIGERANT TEMP SENSOR	3
4RT13	ABSORBER SPRAY TEMP SENSOR	3
4RT14	SOLUTION TEMP LEAVING ABSORBER SENSOR	3
4RT15	SOLUTION TEMP ENTERING ABSORBER SENSOR	3
4RT16	SOLUTION TEMP ENTERING LOW TEMP GENERATOR SENSOR	3
4RT18	SOLUTION TEMP LEAVING LOW TEMP GENERATOR SENSOR	3
4RT19	SATURATED CONDENSER REFRIGERANT TEMP SENSOR	3
4RT22	HOT WATER TEMP ENTERING LOW TEMP GENERATOR SENSOR	2
4RT23	STM COND OR HOT WATER TEMP LVG LOW TEMP GEN SENSOR	2
4S1	REFRIGERANT PUMP MOTOR HIGH TEMP CUT-OUT	2
4S2	ABSORBER SOLUTION PUMP MOTOR HIGH TEMP CUT-OUT	2
4S3	LOW TEMP SOLUTION PUMP MOTOR HIGH TEMP CUT-OUT	2
4S16	REFRIGERANT LIQUID LEVEL SENSOR	3
4TB4	PURGE CONTROL TERMINAL STRIP	3
4U1	ABSORBER SOLUTION PUMP ADJUSTABLE FREQUENCY DRIVE	1
4U2	LOW TEMP SOLUTION PUMP ADJUSTABLE FREQUENCY DRIVE	1
5RT1	OUTDOOR AIR TEMP SENSOR	2
6DS1	PURGE ALARM INDICATOR LIGHT	3
6K1	HOT WATER PUMP MOTOR STARTER	2
6K2	CHILLED WATER PUMP MOTOR STARTER	2
6K3	CONDENSER AND ABSORBER WATER PUMP MOTOR STARTER	2
6K4	SOLUTION PUMP RUNNING STATUS RELAY	2
6K5	MACHINE MANUAL RESET ALARM STATUS RELAY	2
6K6	LIMIT WARNING STATUS RELAY	2
6K7	MACHINE AUTOMATIC RESET ALARM STATUS RELAY	2
6K8	HEAD RELIEF REQUEST STATUS RELAY	4
6K9	MAXIMUM CAPACITY STATUS RELAY	4
6K11	TRACER CONTROLLED RELAY	4
6K12	TOWER TEMPERATURE LOW RELAY	4
6RT1	TRACER TEMP SENSOR	4
6S1	UNIT EXTERNAL AUTO STOP SWITCH	2
6S2	UNIT EMERGENCY STOP SWITCH	2
6S5	CHILLED WATER FLOW SWITCH	2
6S6	CONDENSER AND ABSORBER WATER FLOW SWITCH	2

DEVICE PREFIX CODE:

1 = MAIN UNIT CONTROL PANEL
4 = UNIT MOUNTED DEVICE
5 = REMOTE MOUNTED DEVICE
6 = CUSTOMER PROVIDED DEVICE

HAZARDOUS VOLTAGE!
DISCONNECT ALL ELECTRIC POWER INCLUDING REMOTE DISCONNECTS BEFORE SERVICING.
FAILURE TO DISCONNECT POWER BEFORE SERVICING CAN CAUSE SEVERE PERSONAL INJURY OR DEATH.

VOLTAGE HASARDEUX!
DECONNECTEZ TOUTES LES SOURCES ELECTRIQUES INCLUANT LES DISJONCTEURS SITUES A DISTANCE AVANT D'EFFECTUER L'ENTRETIEN.
FAUTE DE DECONNECTER LA SOURCE ELECTRIQUE AVANT D'EFFECTUER L'ENTRETIEN PEUT ENTRAINER DES BLESSURES CORPORELLES SEVERES OU LA MORT.

USE COPPER CONDUCTORS ONLY!
UNIT TERMINALS ARE NOT DESIGNED TO ACCEPT OTHER TYPES OF CONDUCTORS.
FAILURE TO DO SO MAY CAUSE DAMAGE TO THE EQUIPMENT.

NOTE:

1. UNLESS OTHERWISE SPECIFIED, SOLID LINES INDICATE WIRING BY THE TRANE COMPANY AND DASHED LINES INDICATE FIELD WIRING PROVIDED BY CUSTOMER. REFER TO UNIT FIELD WIRING LAYOUT AND CONNECTION DIAGRAMS TO DETERMINE THE ACTUAL CUSTOMER SUPPLIED DEVICES AND WIRING REQUIRED ON THE UNIT.
2. NUMBERS ALONG THE RIGHT SIDE OF THE SCHEMATIC DESIGNATE THE LOCATION OF DEVICE CONTACTS BY LINE NUMBER. AN UNDERLINED NUMBER INDICATES A NORMALLY CLOSED CONTACT.
3. UNLESS OTHERWISE SPECIFIED, ALL SWITCHES ARE SHOWN AT 25°C (77°F), AT ATMOSPHERIC PRESSURE, AT 50% RELATIVE HUMIDITY, WITH ALL UTILITIES TURNED OFF AND AFTER A NORMAL SHUTDOWN HAS OCCURRED.
4. ALL TRANE DEVICES AND ASSOCIATED WIRING MARKED AS OPTIONAL MAY NOT BE PRESENT ON THE UNIT UNLESS REQUIRED BY CONTROL OPTIONS SPECIFIED ON THE SALES ORDER. REFER TO THE AS-BUILT SCHEMATIC WIRING DIAGRAM SUPPLIED WITH THE UNIT TO DETERMINE OPTIONAL TRANE DEVICES AND WIRING ACTUALLY SUPPLIED ON THE UNIT.
5. 1S1 NON-FUSED DISCONNECT SWITCH SHOWN. OPTIONAL LINE VOLTAGE POWER CONNECTIONS MAY BE TO A 1S1 FUSED DISCONNECT SWITCH, 1TB1 TERMINAL BLOCK OR 1CB1 CIRCUIT BREAKER AS SPECIFIED ON THE SALES ORDER FOR THE UNIT. IF THE 1TB1 TERMINAL BLOCK IS SPECIFIED FOR LINE VOLTAGE POWER CONNECTION, THE 1TB2 TERMINAL BLOCK SHOWN IS NOT PRESENT AND 1F4 THRU 1F9 FUSE WIRING WILL PASS THRU 1T1, 1T2 AND 1T3 PHASE CURRENT TRANSFORMERS AND CONNECT DIRECTLY TO THE 1TB1 TERMINAL BLOCK.
6. 4U1 AND 4U2 DEVICE TERMINALS SHOWN ARE USED ON ALL UNIT LINE VOLTAGES EXCEPT 575V-60HZ. WHEN UNIT LINE VOLTAGE IS 575V-60HZ, DEVICE TERMINALS SHOWN IN PARENTHESIS ARE USED.

Unit Wiring Diagrams

Figure 33 – ABSD Horizon Single-Stage Steam or Hot Water Absorption with Adjustable Frequency Drives – Circuit and Chiller Control (See Notes Table 14)

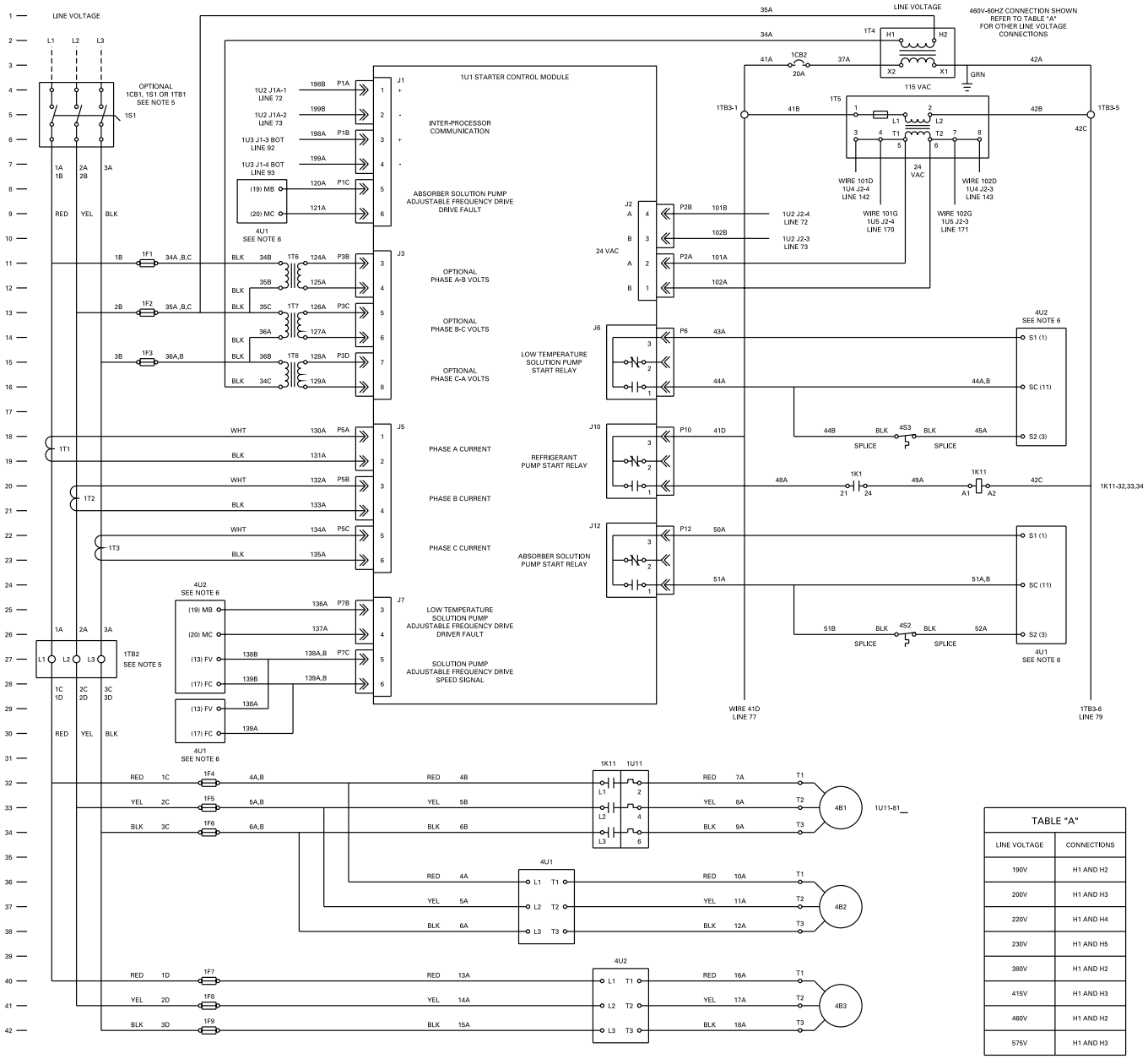

TABLE "A"	
LINE VOLTAGE	CONNECTIONS
190V	H1 AND H2
200V	H1 AND H3
220V	H1 AND H4
230V	H1 AND H5
380V	H1 AND H2
415V	H1 AND H3
460V	H1 AND H2
575V	H1 AND H3

Unit Wiring Diagrams

Figure 34 - ABSD Horizon Single-Stage Steam or Hot Water Absorption – Purge and Stepper Control Modules and Local Clear Language Display Panel (See Notes Table 14)

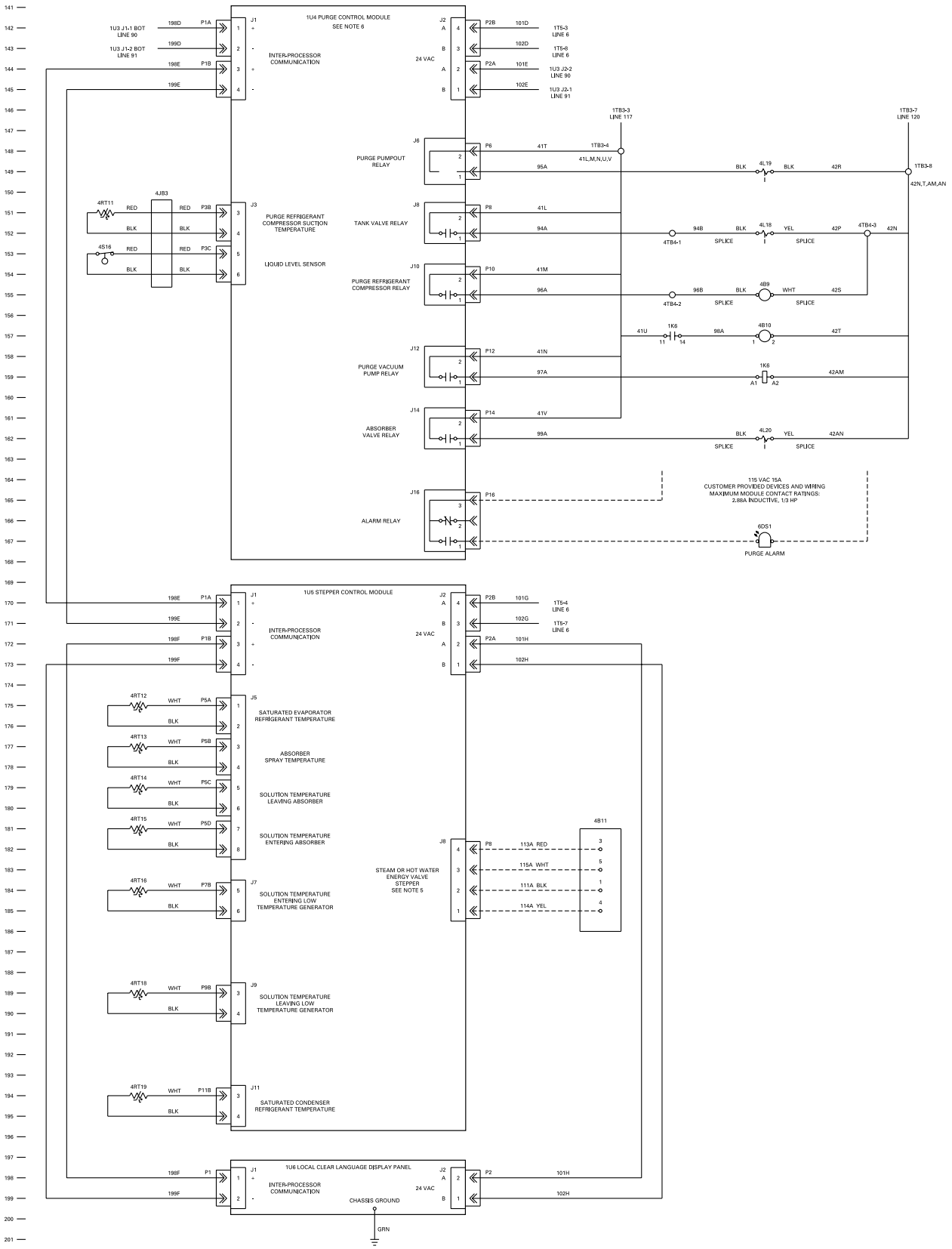

Unit Wiring Diagrams

Figure 35 – ABSD Horizon Single-Stage Steam or Hot Water Absorption – Options Control Module and/or Communication Control Modules (See Notes Table 14)

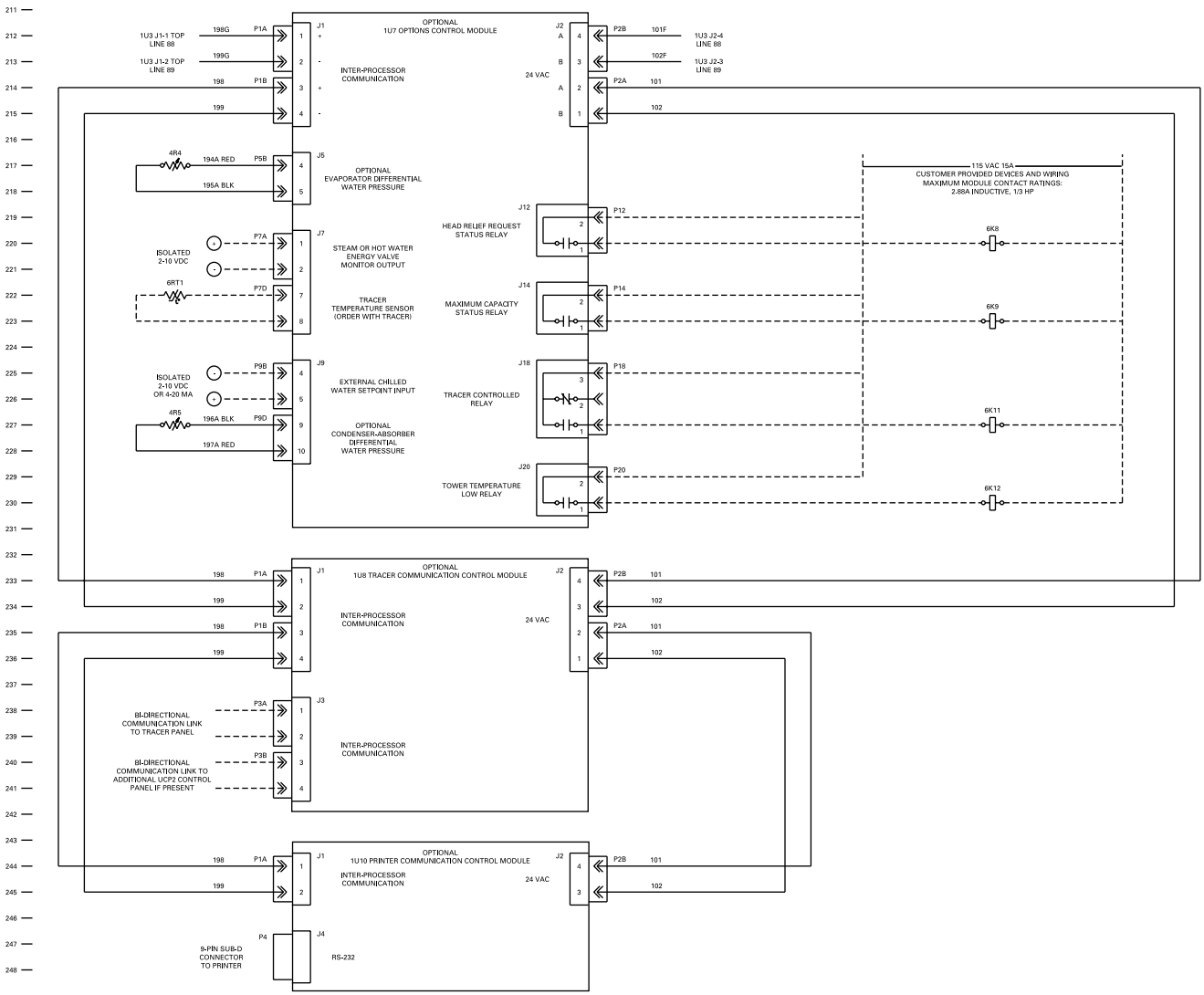

Unit Wiring Diagrams

Figure 36 – Connections: Main Unit Control Panel (Left Side)

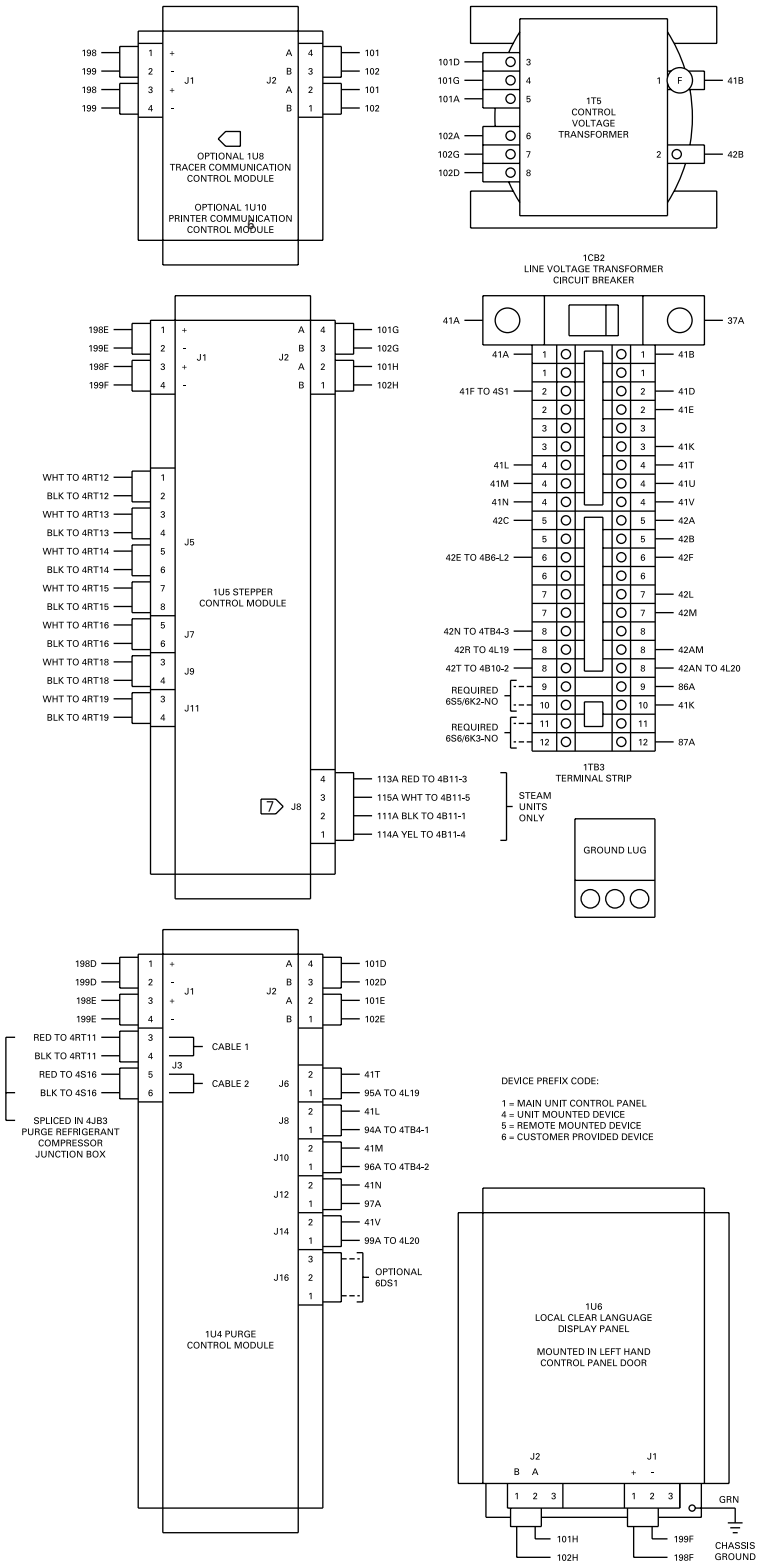

Unit Wiring Diagrams

Figure 37 – Connections: Unit Control Panel (Right Side)

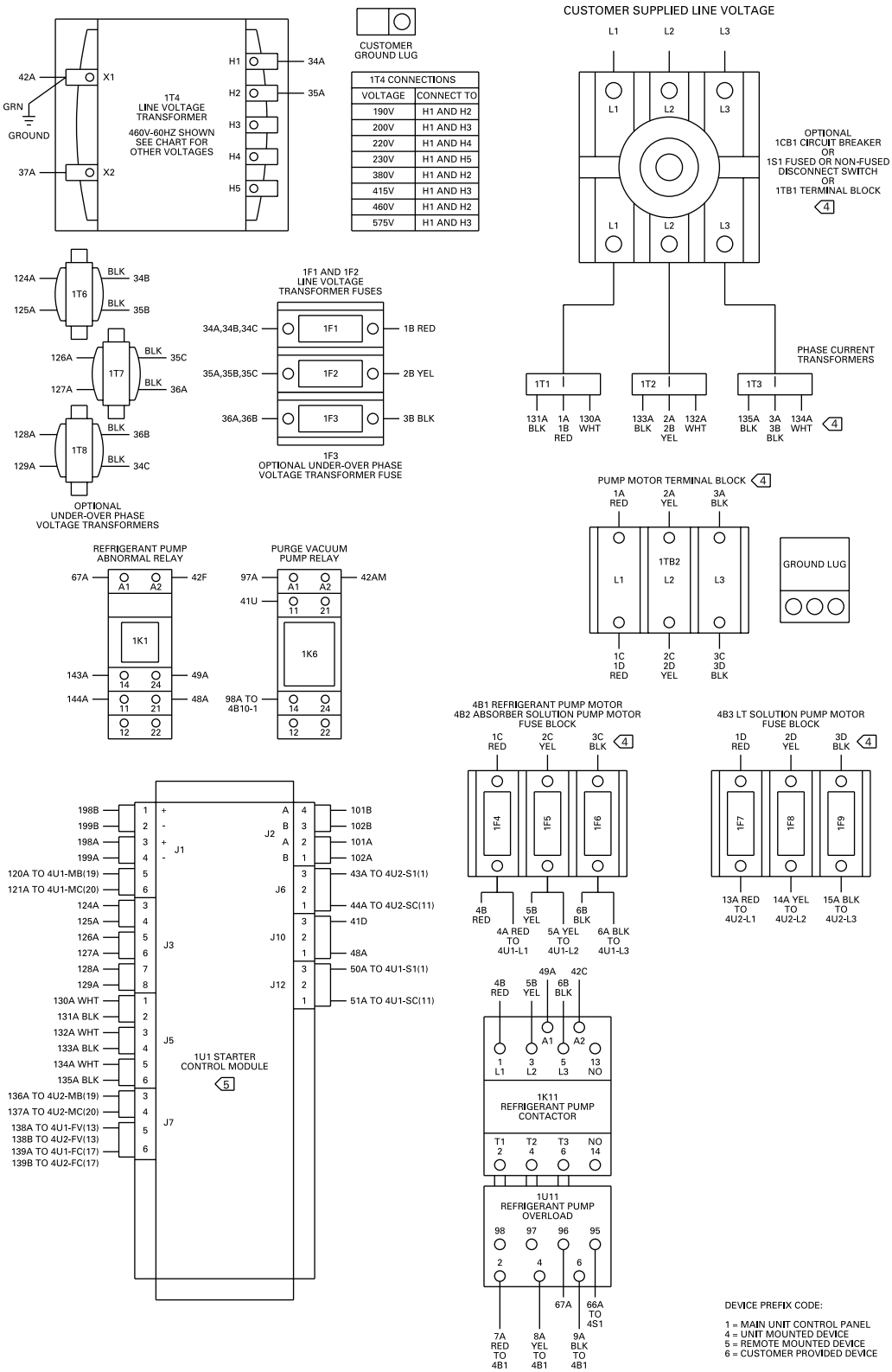

Unit Wiring Diagrams

Figure 38 – Connections: Unit Control Panel

NOTE:

1. REFER TO DRAWING FIGURES (PAGES 76-77) FOR UNIT MOUNTED DEVICES AND WIRING.
2. ALL TRANE DEVICES AND ASSOCIATED WIRING MARKED AS OPTIONAL MAY NOT BE PRESENT ON THE UNIT UNLESS REQUIRED BY CONTROL OPTIONS SPECIFIED ON THE SALES ORDER. REFER TO THE AS-BUILT SCHEMATIC WIRING DIAGRAM SUPPLIED WITH THE UNIT TO DETERMINE OPTIONAL TRANE DEVICES AND WIRING ACTUALLY SUPPLIED ON THE UNIT.
3. UNLESS OTHERWISE SPECIFIED, DASHED LINES INDICATE DEVICES AND WIRING TO BE PROVIDED BY CUSTOMER. REFER TO THE AS-BUILT SCHEMATIC WIRING AND UNIT FIELD CONNECTION DIAGRAMS SUPPLIED WITH THE UNIT TO DETERMINE THE ACTUAL CUSTOMER SUPPLIED DEVICES AND WIRING REQUIRED ON THE UNIT.

4 1S1 NON-FUSED DISCONNECT SWITCH SHOWN. OPTIONAL LINE VOLTAGE POWER CONNECTIONS MAY BE TO A 1S1 FUSED DISCONNECT SWITCH, 1TB1 TERMINAL BLOCK OR 1CB1 CIRCUIT BREAKER AS SPECIFIED ON THE SALES ORDER FOR THE UNIT. IF THE 1TB1 TERMINAL BLOCK IS SPECIFIED FOR LINE VOLTAGE POWER CONNECTION, THE 1TB2 TERMINAL BLOCK SHOWN IS NOT PRESENT AND 1F4 THRU 1F9 FUSE WIRING WILL PASS THRU 1T1, 1T2 AND 1T3 PHASE CURRENT TRANSFORMERS AND CONNECT DIRECTLY TO THE 1TB1 TERMINAL BLOCK.

5 TERMINALS INDICATED FOR WIRING TO 4U1 AND 4U2 DEVICES ARE USED ON ALL UNIT LINE VOLTAGES EXCEPT 575V-60HZ. WHEN UNIT LINE VOLTAGE IS 575V-60HZ, DEVICE TERMINALS SHOWN IN PARENTHESIS ARE USED.

6 COMMUNICATION MODULES LISTED IN ORDER OF MOUNTING PREFERENCE TO CONTROL PANEL. WHEN ANY COMBINATION OF MODULES ARE PRESENT, INTER-PROCESSOR COMMUNICATION (WIRE 198 AND 199) AND 24 VAC (WIRE 101 AND 102) WIRING IS JUMPERED BETWEEN MODULES. IF OPTIONAL 1U7 OPTIONS CONTROL MODULE IS PRESENT, COMMUNICATION CONTROL MODULES ARE WIRED AS FOLLOWS: WIRE 198 CONNECTS TO 1U7 J1-3, WIRE 199 CONNECTS TO 1U7 J1-4, WIRE 101 CONNECTS TO 1U7 J2-2 AND WIRE 102 CONNECTS TO 1U7 J2-1. IF OPTIONAL 1U7 OPTIONS CONTROL MODULE IS NOT PRESENT, COMMUNICATION CONTROL MODULES ARE WIRED TO 1U3 CHILLER CONTROL MODULE AS FOLLOWS: WIRE 198 CONNECTS TO 1U3 J1-1 (TOP), WIRE 199 CONNECTS TO 1U3 J1-2 (TOP), WIRE 101 CONNECTS TO 1U3 J2-4 AND WIRE 102 CONNECTS TO 1U3 J2-3.

7 TRANE PROVIDES THE UNIT ENERGY VALVE AND PRESSURE TRANSDUCERS (USED ON STEAM UNITS ONLY) FOR FIELD INSTALLATION AND WIRING BY CUSTOMER AS STANDARD ON STEAM OR HOT WATER UNITS. TRANE TO INSTALL AND WIRE DEVICES AS SHOWN ON STEAM UNITS WHEN THE FACTORY INSTALLED UNIT ENERGY VALVE OPTION IS SPECIFIED ON THE SALES ORDER.

⚠ WARNING

HAZARDOUS VOLTAGE!

DISCONNECT ALL ELECTRIC POWER INCLUDING REMOTE DISCONNECTS BEFORE SERVICING.

FAILURE TO DISCONNECT POWER BEFORE SERVICING CAN CAUSE SEVERE PERSONAL INJURY OR DEATH.

⚠ AVERTISSEMENT

VOLTAGE HASARDEUX!

DECONNECTEZ TOUTES LES SOURCES ELECTRIQUES INCLUANT LES DISJONCTEURS SITUES A DISTANCE AVANT D'EFFECTUER L'ENTRETIEN.

FAUTE DE DECONNECTER LA SOURCE ELECTRIQUE AVANT D'EFFECTUER L'ENTRETIEN PEUT ENTRAINER DES BLESSURES CORPORELLES SEVERES OU LA MORT.

⚠ CAUTION

USE COPPER CONDUCTORS ONLY!

UNIT TERMINALS ARE NOT DESIGNED TO ACCEPT OTHER TYPES OF CONDUCTORS.

FAILURE TO DO SO MAY CAUSE DAMAGE TO THE EQUIPMENT.

DEVICE PREFIX CODE:

1 = MAIN UNIT CONTROL PANEL
4 = UNIT MOUNTED DEVICE
5 = REMOTE MOUNTED DEVICE
6 = CUSTOMER PROVIDED DEVICE

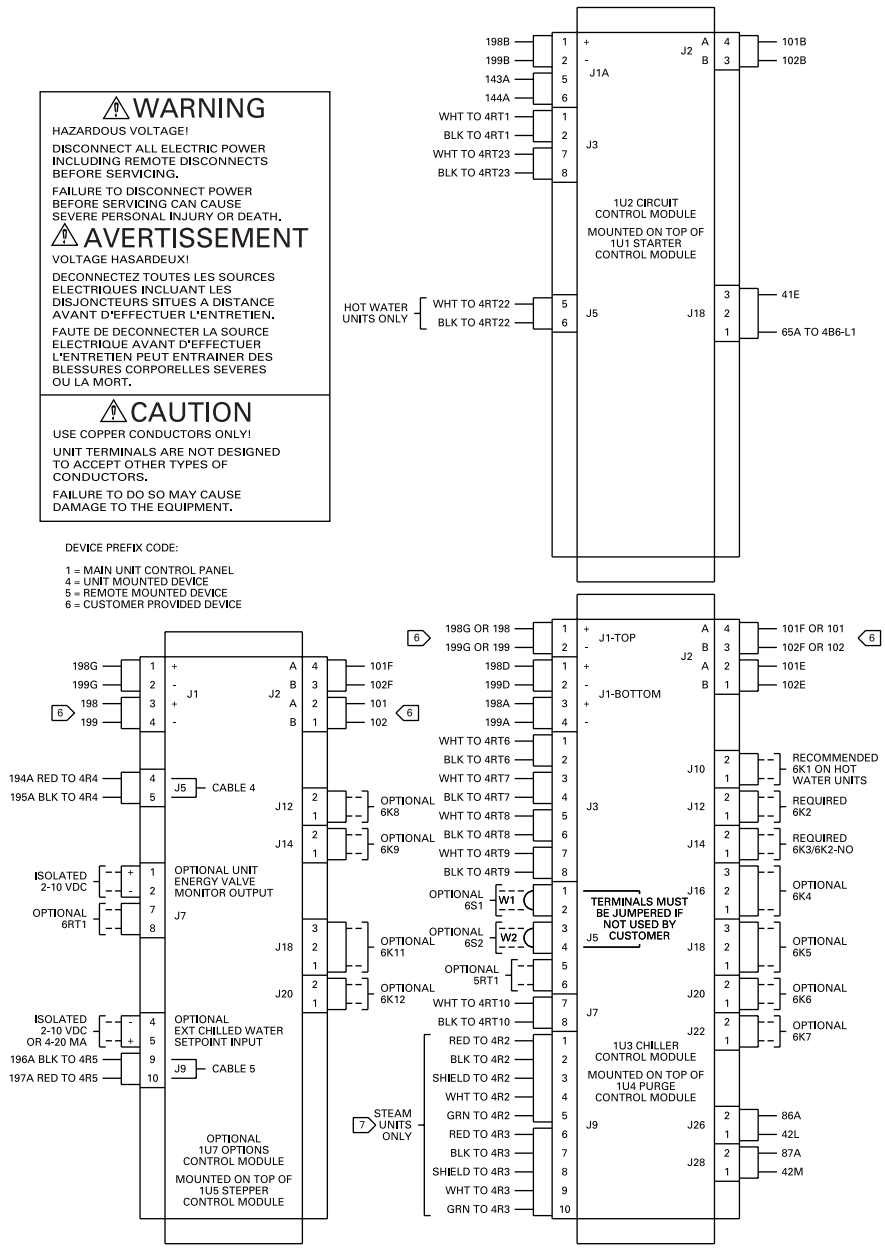

Unit Wiring Diagrams

Figure 39 – Connection Diagram – Unit Mounted Controls

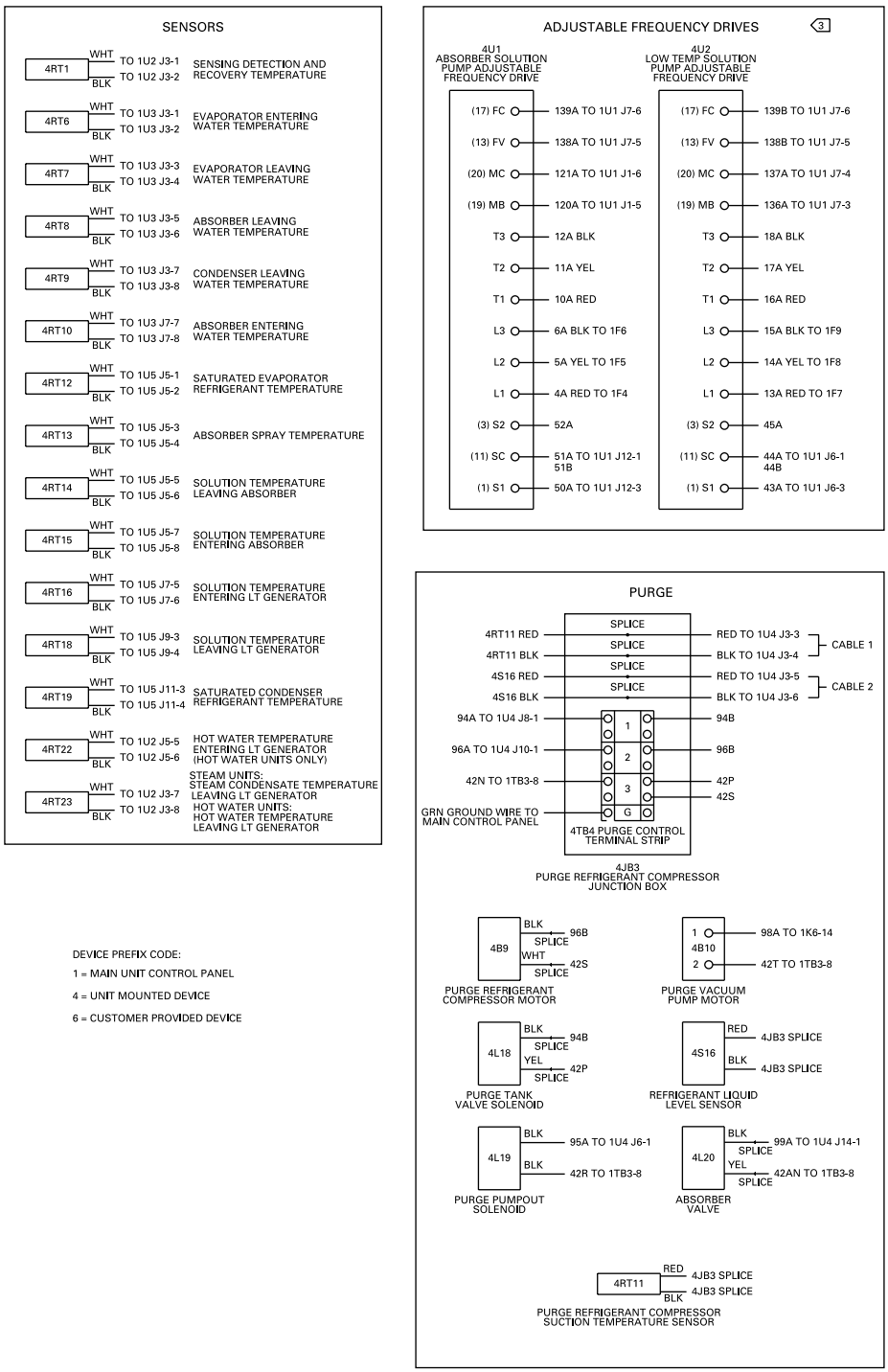

Unit Wiring Diagrams

Figure 40 – Connection Diagram – Unit Mounted Controls

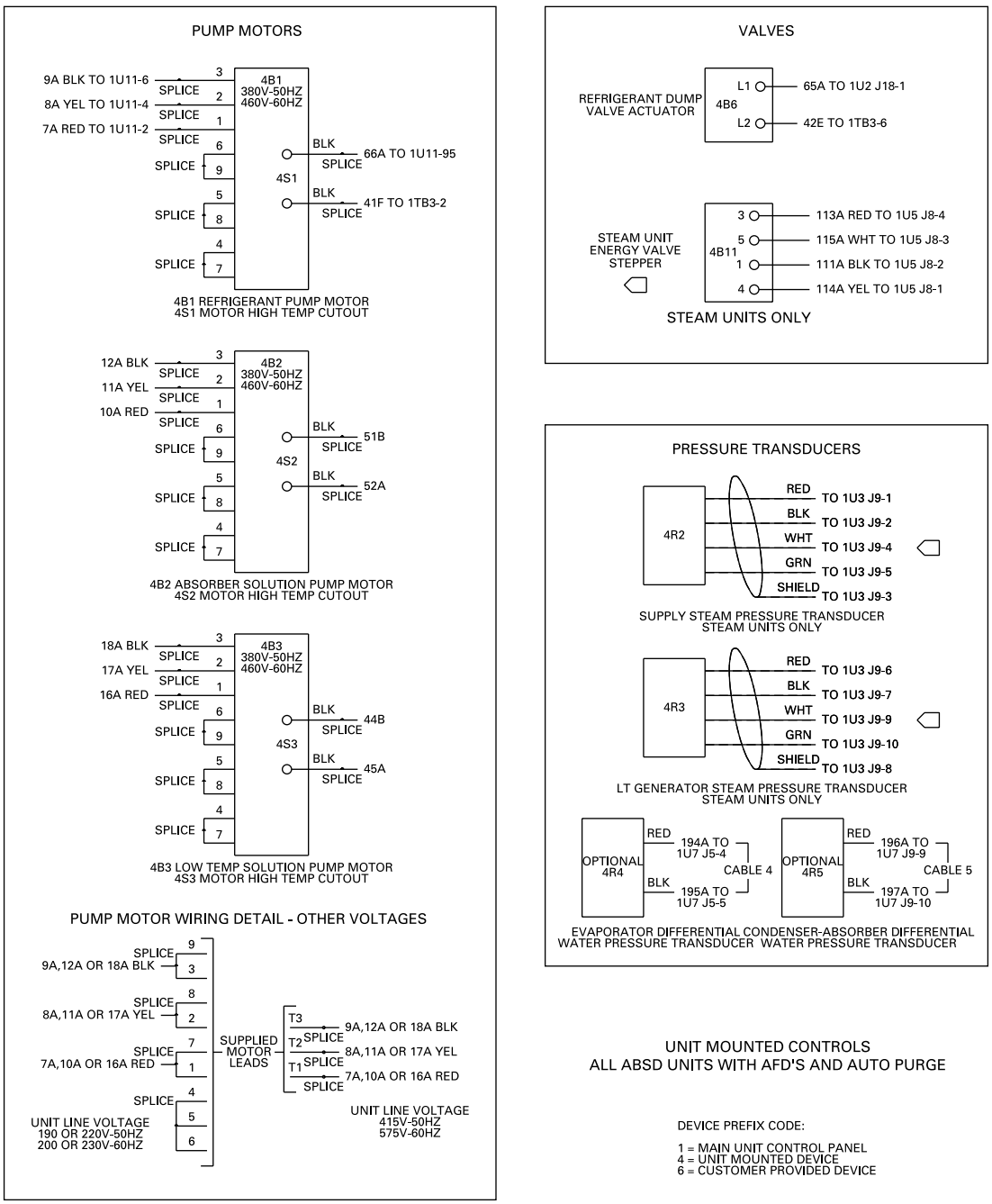

NOTE:

1. REFER TO FIGURES (ON PAGES 73-75) FOR MAIN UNIT CONTROL PANEL MOUNTED DEVICES AND WIRING.
2. ALL TRANE DEVICES AND ASSOCIATED WIRING MARKED AS OPTIONAL MAY NOT BE PRESENT ON THE UNIT UNLESS REQUIRED BY CONTROL OPTIONS SPECIFIED ON THE SALES ORDER. REFER TO THE AS-BUILT SCHEMATIC WIRING DIAGRAM SUPPLIED WITH THE UNIT TO DETERMINE OPTIONAL TRANE DEVICES AND WIRING ACTUALLY SUPPLIED ON THE UNIT.

3 TERMINALS INDICATED ON 4U1 AND 4U2 DEVICES ARE USED ON ALL UNIT LINE VOLTAGES EXCEPT 575V-60HZ. WHEN UNIT LINE VOLTAGE IS 575V-60HZ, DEVICE TERMINALS SHOWN IN PARENTHESIS ARE USED.

4 TRANE PROVIDES THE UNIT ENERGY VALVE AND PRESSURE TRANSDUCERS (USED ON STEAM UNITS ONLY) FOR FIELD INSTALLATION AND WIRING BY CUSTOMER AS STANDARD ON STEAM OR HOT WATER UNITS. TRANE TO INSTALL AND WIRE DEVICES AS SHOWN ON STEAM UNITS WHEN THE FACTORY INSTALLED UNIT ENERGY VALVE OPTION IS SPECIFIED ON THE SALES ORDER.

Unit Wiring Diagrams

Sensors

The table below Indicates unit sensors, primary function control or monitor, connection points, and the normal operation temperature range.

Control sensor abnormal will cause a diagnostic shutdown. Monitor sensor abnormal will generate an informational warning message only, allowing chiller operation to continue.

Table 15

	Sensor Application	Sensor Primary Function	Module
1	Evaporator Entering Water Temperature	LCWT Control	Chiller
2	Evaporator Leaving Water Temperature	LCWT Control	Chiller
3	Absorber Entering Water Temperature	ELWT-Fdfwd and Low Tower Limit	Chiller
4	Absorber Leaving Water Temperature	Monitor	Chiller
5	Cond Leaving Water Temperature	Monitor	Chiller
6	Solution Temperature Leaving Low Temperature Generator	Concentration Calculation (LTG)	Stepper
7	Saturated Evaporator Refrigerant Temperature	Evaporator Limit	Stepper
8	Saturated Condenser Refrigerant Temperature	Concentration Calculation (LTG)	Stepper
9	Differential Evaporator Water Pressure (Optional)	Monitor	TBD
10	Differential Tower Water Pressure (Optional)	Monitor	TBD
11			
12			
13			
14			
15	Solution Temperature Entering Absorber	Control T-Margin	Stepper
16	Solution Temperature Leaving Absorber	Monitor	Stepper
17	Solution Temperature Entering Low Temperature Generator	Monitor	Stepper
18	Absorber Spray Temperature	Monitor	Stepper
19			
20	SDR Temperature	SDR Logic	Circuit
21	Supply Steam Pressure (4R2)	Control	Chiller
22	High Temperature Steam Pressure (4R3)	Control	Chiller
23	Entering Steam Temperature or Hot Water Entering	Monitor	Circuit
24	Steam Condensate Leaving CHX or Hot Water Leaving	Monitor	Circuit

Literature Order Number	ABS-M-10A-E4
File Number	SV-RF-000-ABS-M-10A-E4-0901
Supersedes	New
Stocking Location	La Crosse

The Trane Company
An American Standard Company
www.trane.com

For more information contact your local sales office or e-mail us at comfort@trane.com

Société Trane – Société Anonyme au capital de 61 005 000 Euros – Siège Social: 1 rue des Amériques – 88190 Golbey – France – Siret 306 050 188-00011 – RSC Epinal B 306 050 188
Numéro d'identification taxe intracommunautaire: FR 83 3060501888