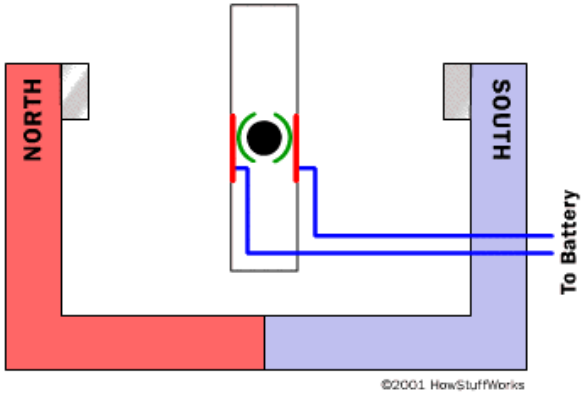

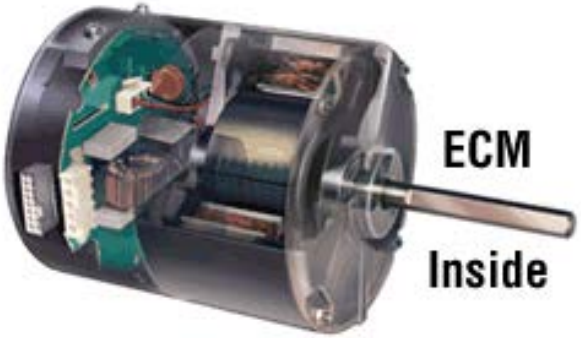

ECM, PM, or BLDC

Electronically Commutated Motor

Brushless DC motors

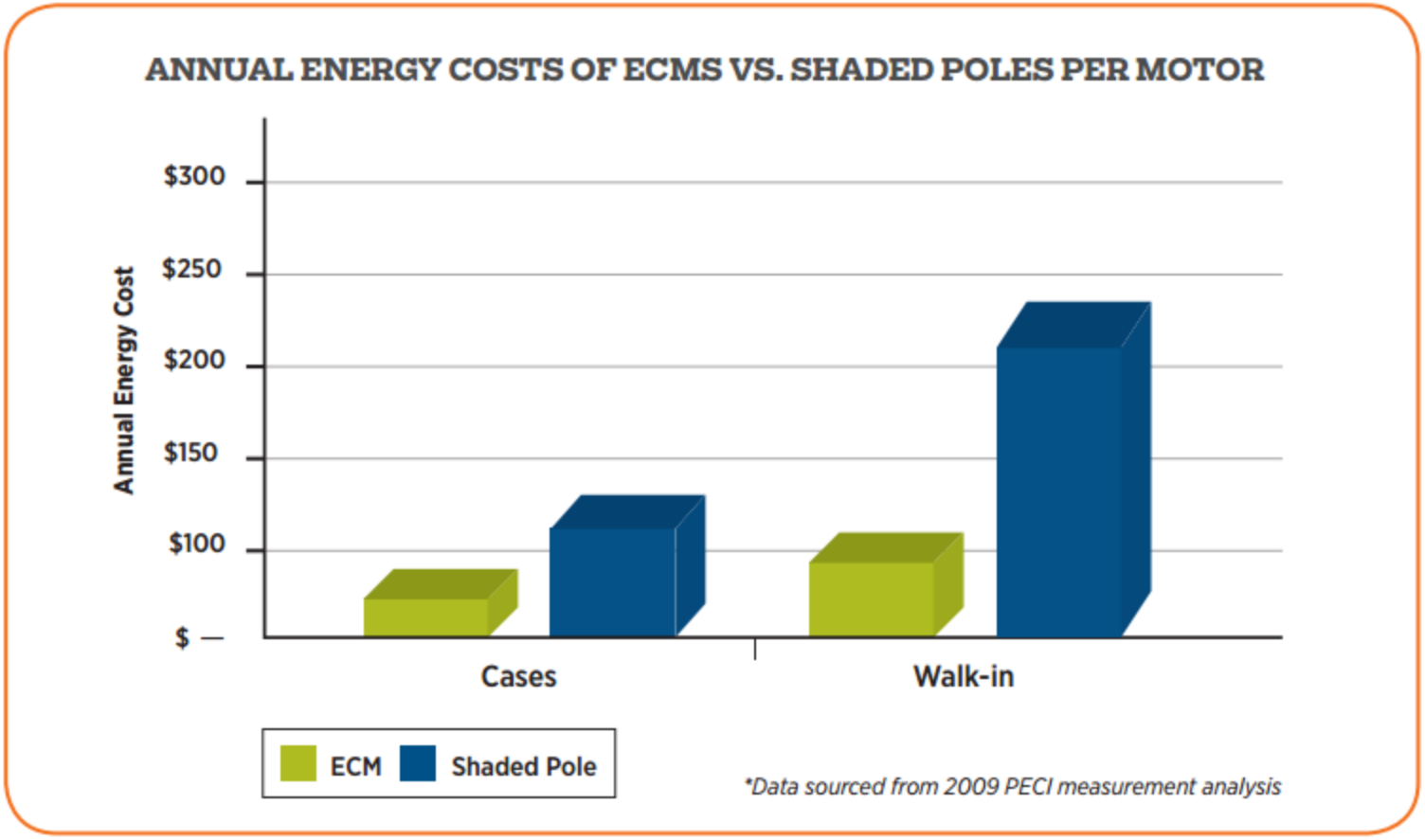

Energy savings are estimates only. They are based on an average $0.13/kWh energy cost in PG&E territory.

Efficiency (HVAC Indoor Blower Motors)

PSC = 60% efficient at rated RPM (1075 for 6-pole)
ECM = 80% efficient at all speeds

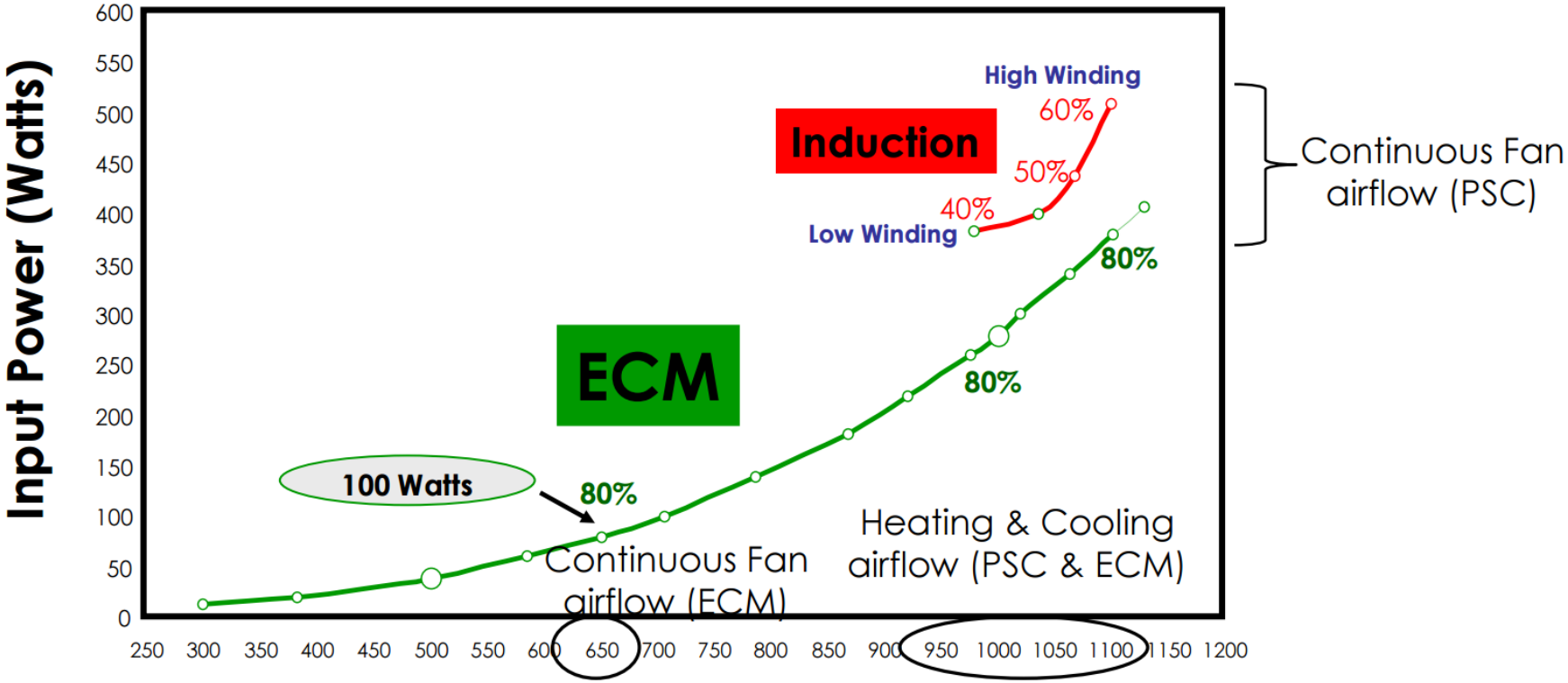

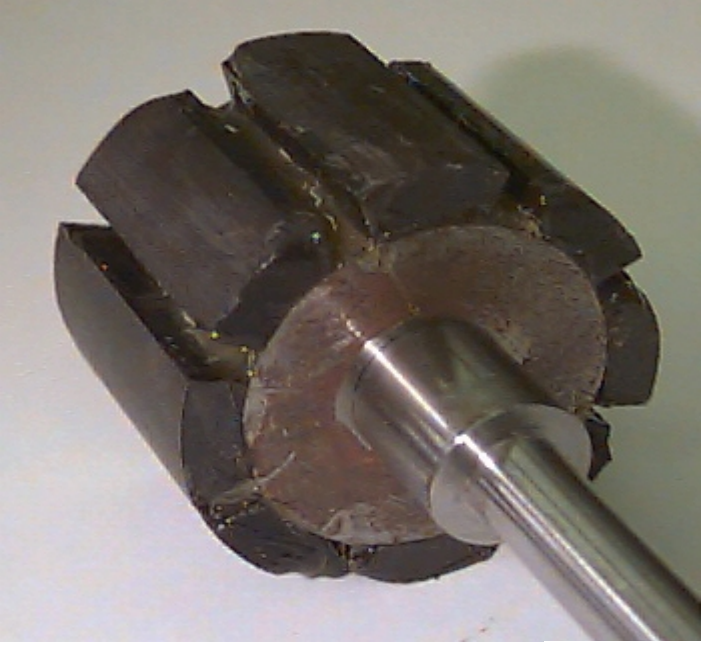

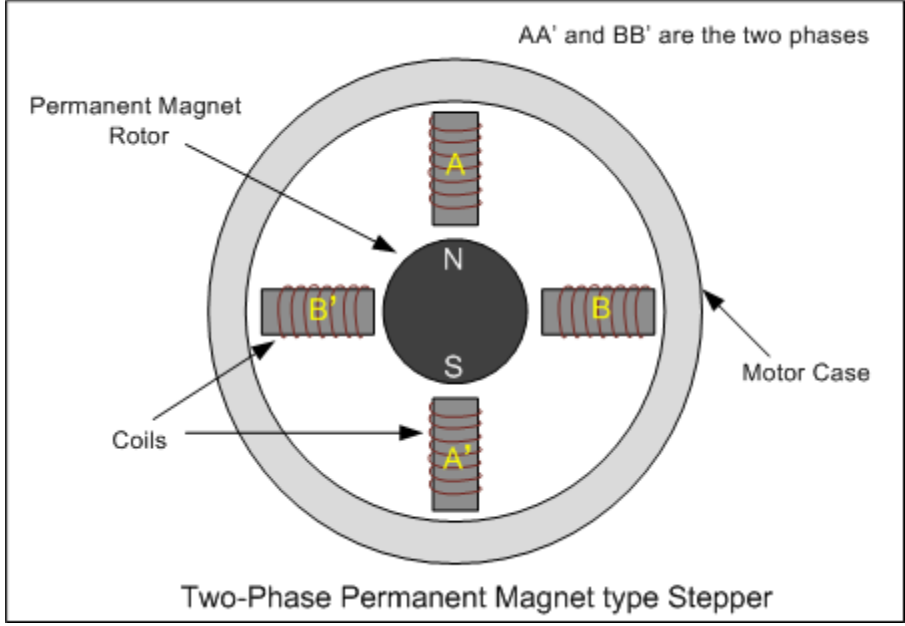
AA' and BB' are the two phases
Permanent Magnet Rotor
A
N
B'
B
S
Motor Case
Coils
A'
Two-Phase Permanent Magnet type Stepper

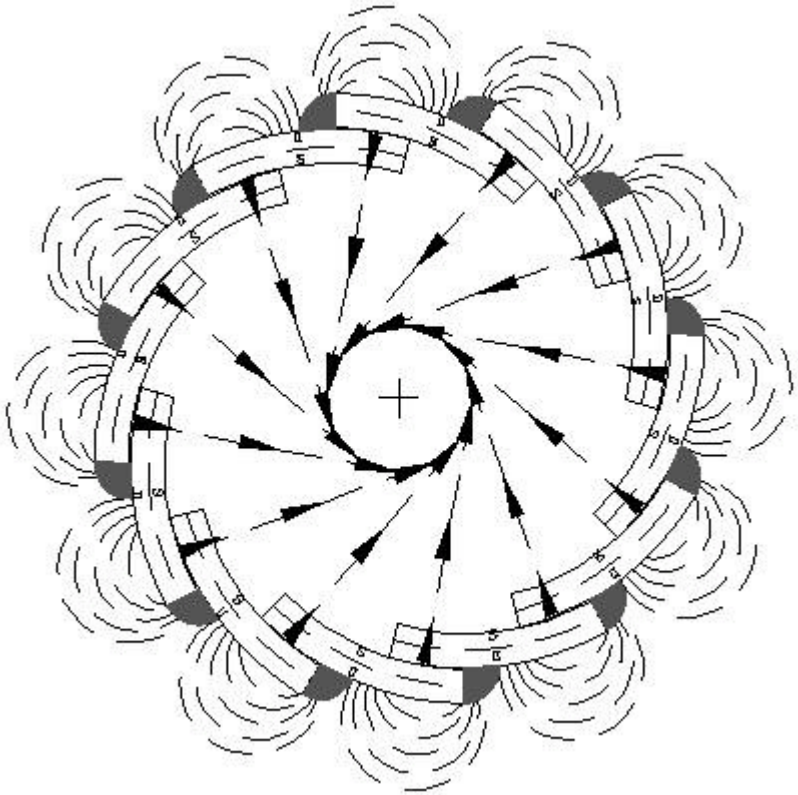

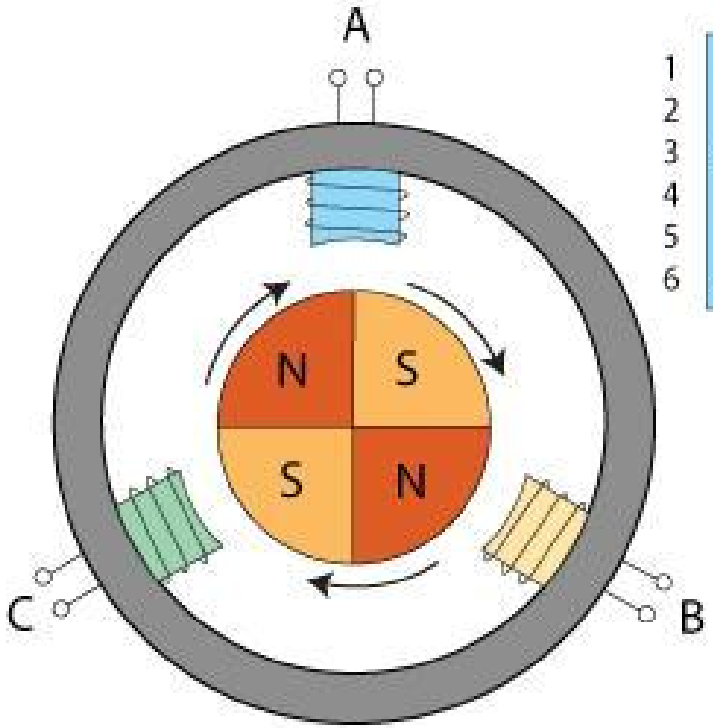

	Coil A	Coil B	Coil C
1	+	-	off
2	+	off	-
3	off	+	-
4	-	+	off
5	-	+	off
6	off	-	+

Six commutation phases "move" the electromagnetic field, which causes the permanent magnets on the rotor to move

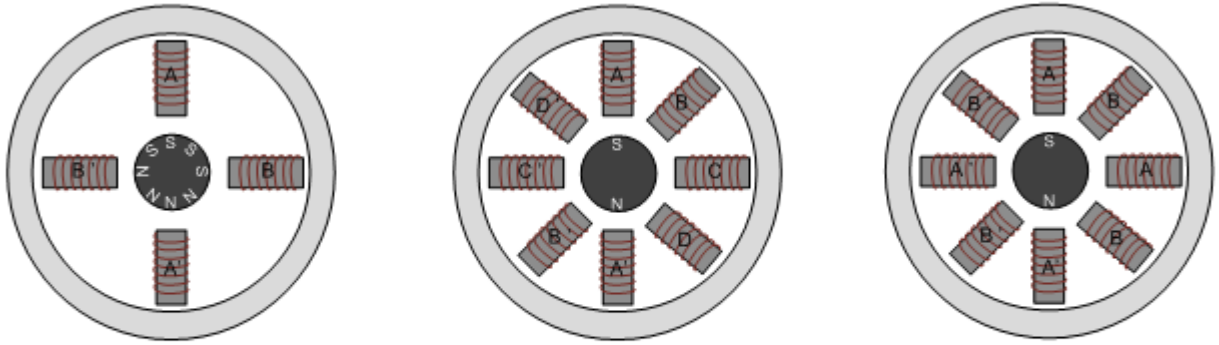

Methods to increase resolution of a Permanent Magnet Stepper

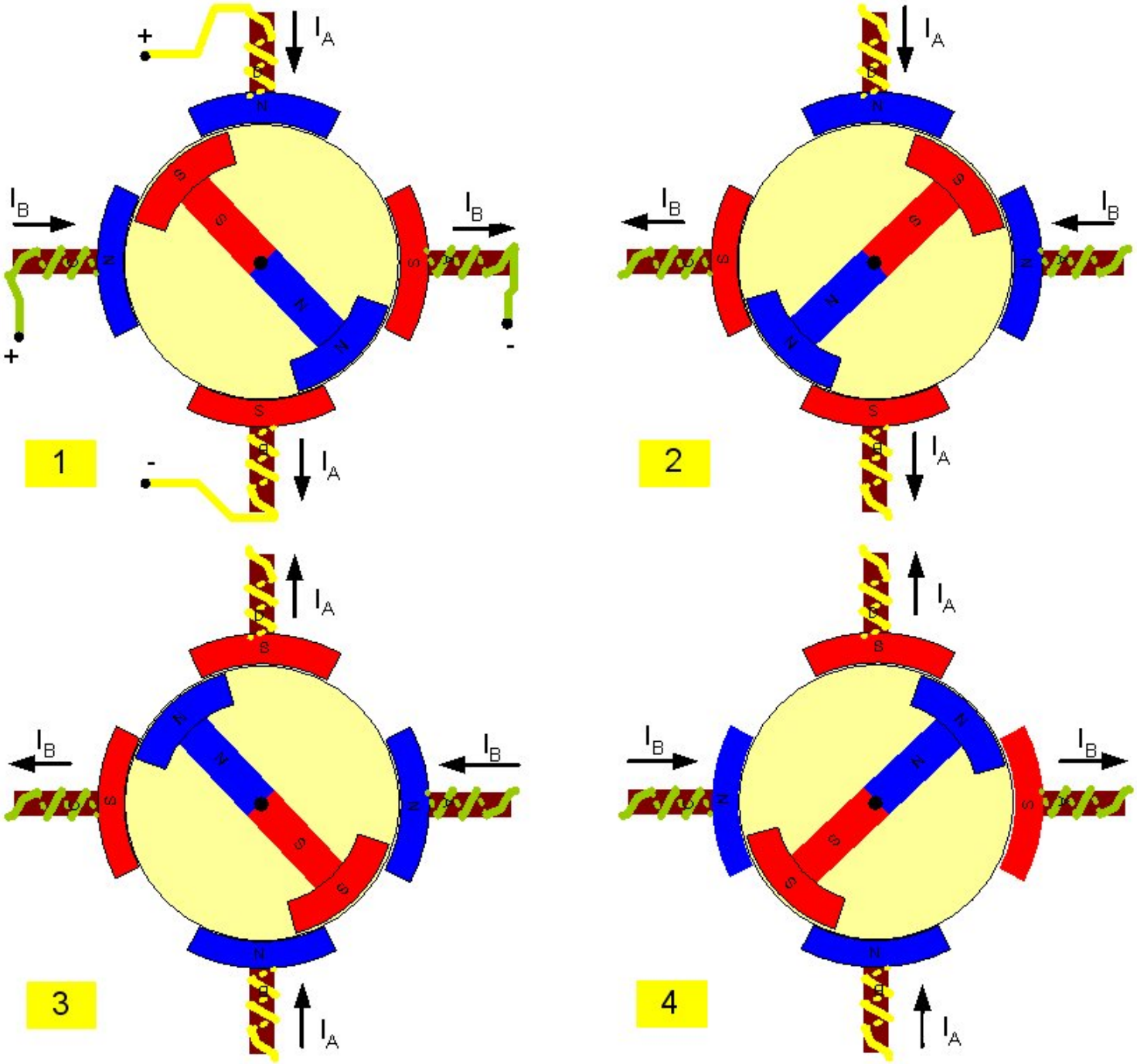
1
2
3
4
I_A
I_B
+
-

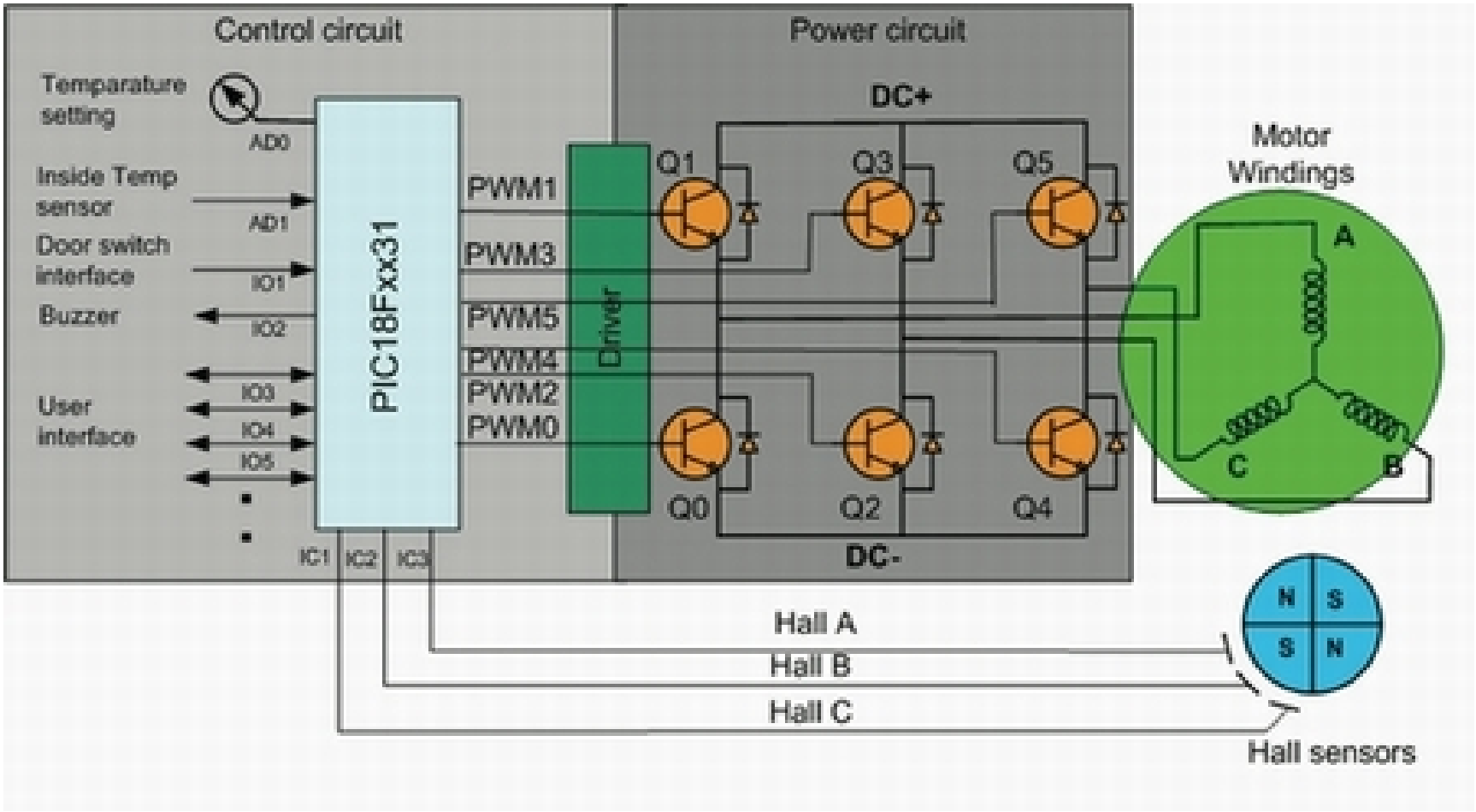
Control circuit
Power circuit
Temparature setting
AD0
Inside Temp sensor
AD1
Door switch interface
IO1
Buzzer
IO2
User interface
IO3
IO4
IO5
PIC18Fxx31
IC1
IC2
IC3
PWM1
PWM3
PWM5
PWM4
PWM2
PWM0
Driver
DC+
Q1
Q3
Q5
Q0
Q2
Q4
DC-
Motor Windings
A
B
C
N
S
S
N
Hall A
Hall B
Hall C
Hall sensors

VFD VS ECM(PM Motors)

- Both take AC and convert to DC
- VFD is generally 3**Ø**
- ECM 1**Ø in** 3**Ø out**
- VFD & ECM Both have Rectifiers
- VFD & ECM both have transistor outputs
- VFD Out put is to AC motor
- ECM Out put is to DC motor
- VFD motor is induction motor
- ECM motor is a synchronous
- ECM can spin a motor at much higher speeds
- ECM rotor has permanent magnets
- VFD’s induce Lots of noise
- AC motors not as efficient as DC motors

VFD Introduction

- VFDs convert AC to DC…then DC to AC (at varying frequency and

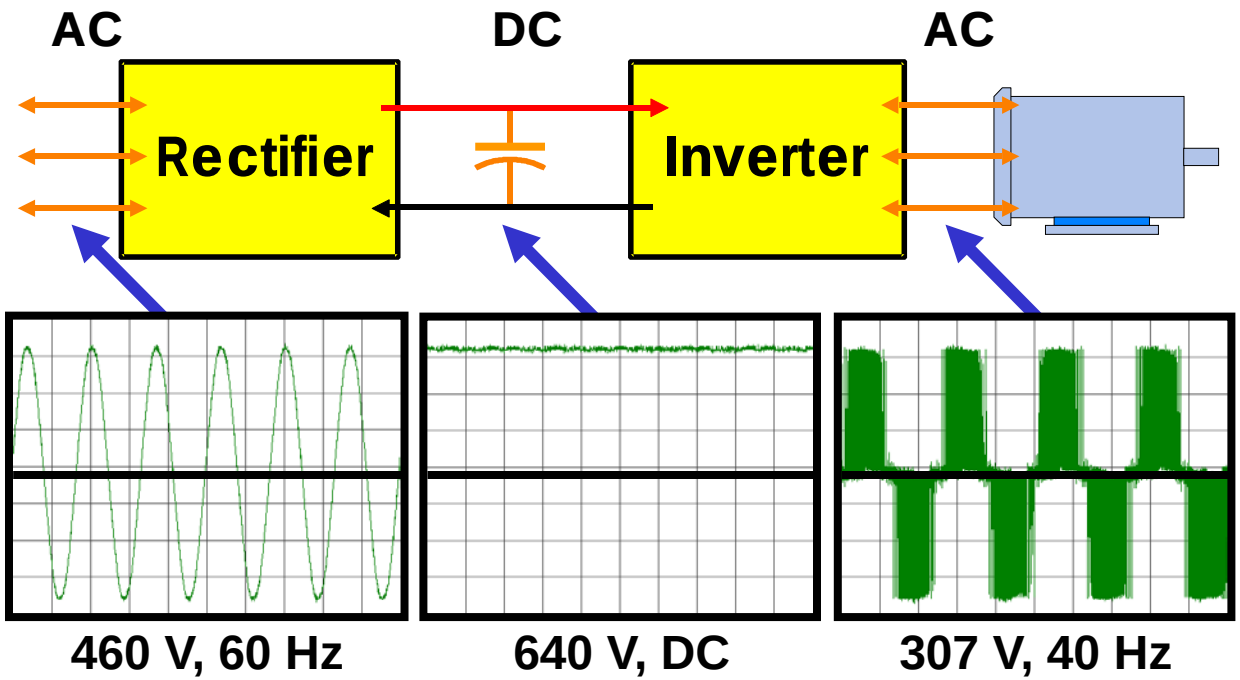

VFDs allow the motor to operate and consume electricity as if it were the right sized horsepower for the job.

VFD Layout

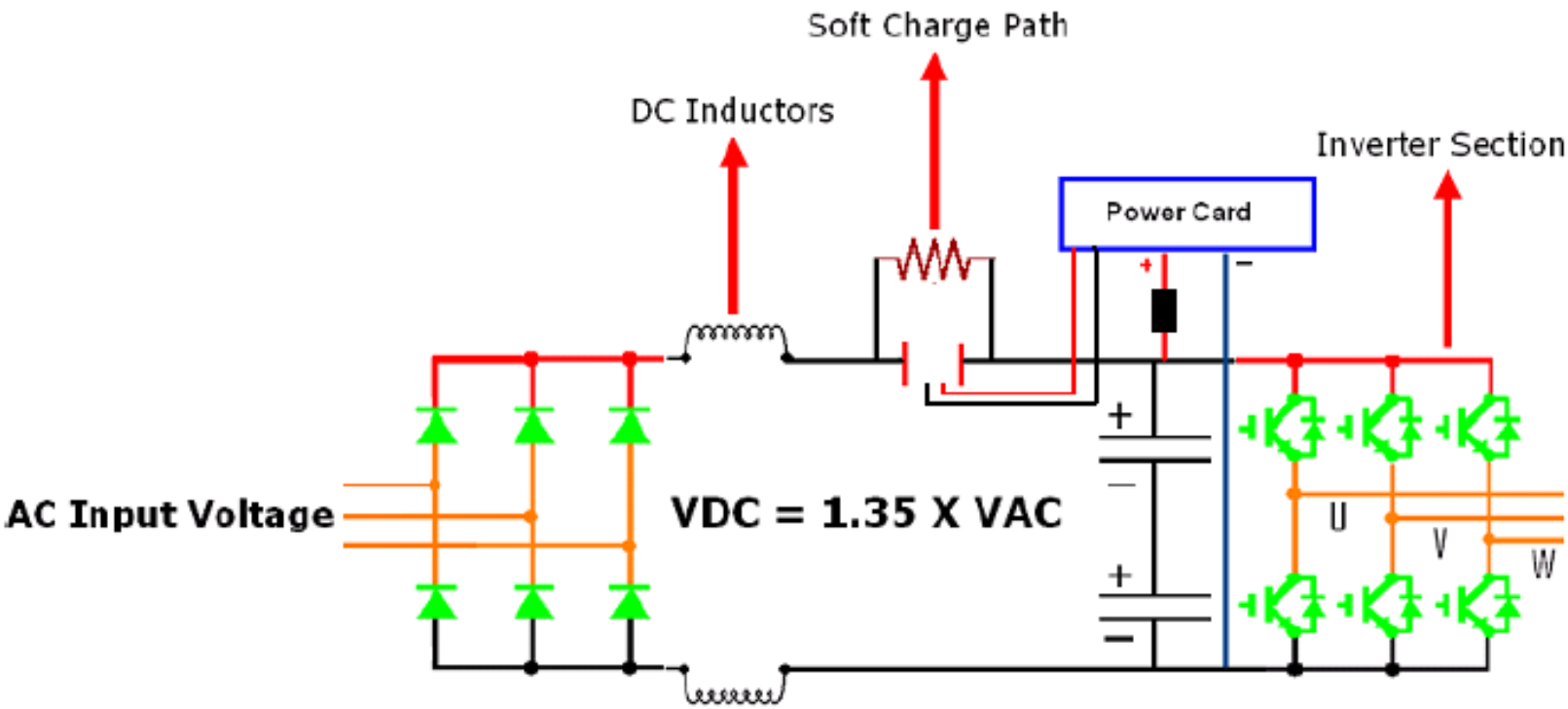
Soft Charge Path
DC Inductors
Inverter Section
Power Card
AC Input Voltage
VDC = 1.35 X VAC
U
V
W

ECM Controller

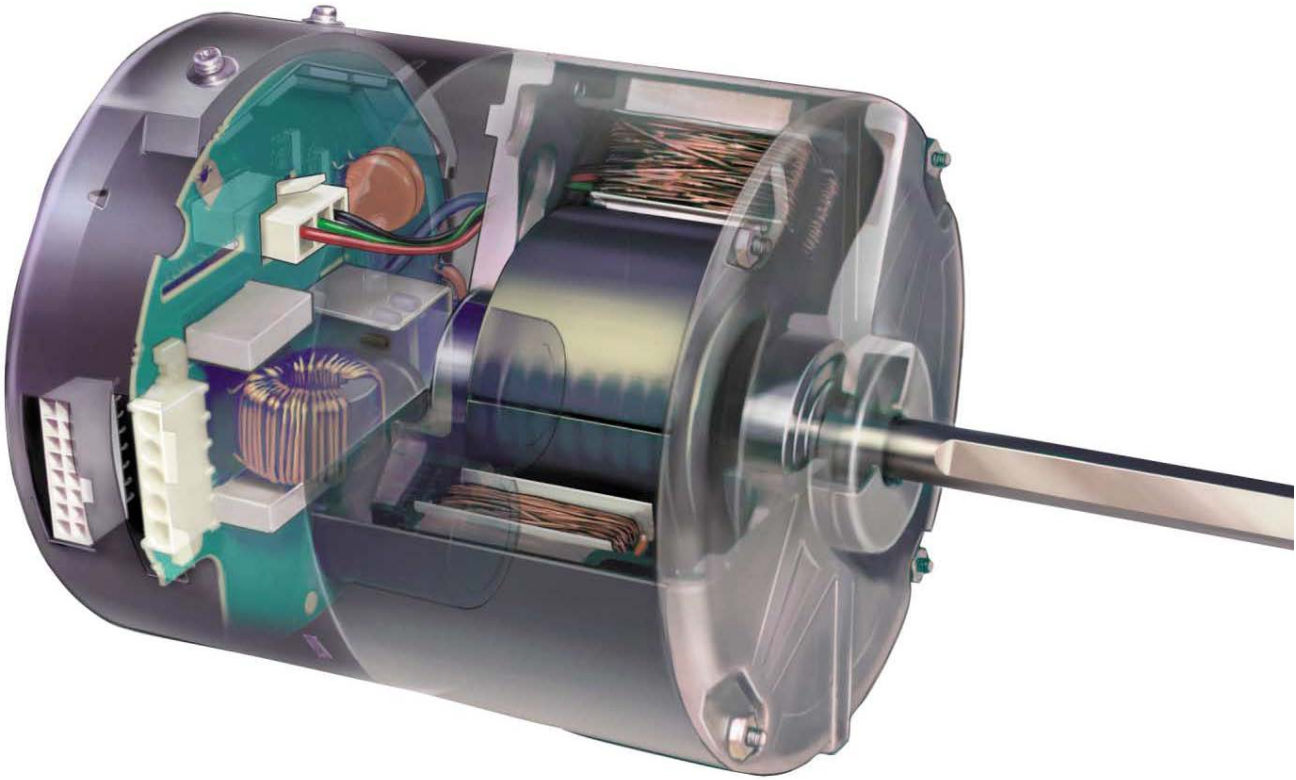

ECM wiring

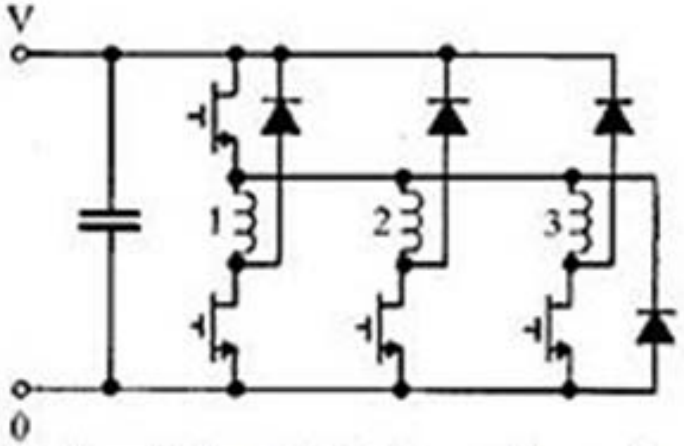

(n+1) switch and diode configuration

What is ECM

- An Electronically commutated Motor
- Three phase wound stator
- Permanent Magnet Rotor
- DC brushless motor
- Synchronous motor
- Incorporated inverter

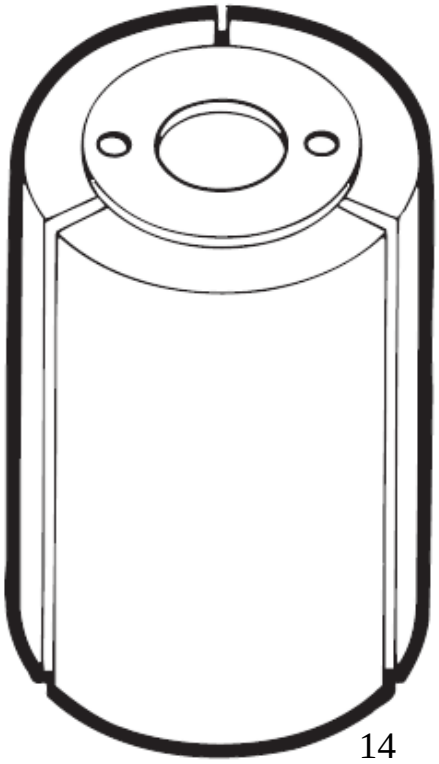

PERMANENT MAGNET

ECM motor Parts

Motor Speed

- 2 Pole Motor

POLE DISTANCE = 180

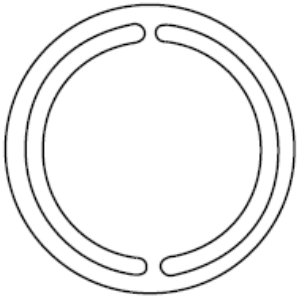

1 CYCLE = 360° DISTANCE

- 4 Pole Motor

POLE DISTANCE = 90°

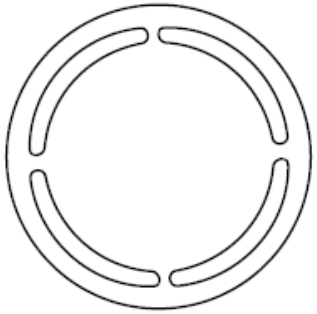

1 CYCLE = 180° DISTANCE

$$\text{Synchronous Motor R.P.M.} = \frac{\text{AC Frequency in Hertz X 120}}{\text{Number of Poles in Motor}}$$

Types of ECM

- Permanent magnet synchronous
- Switching Reluctance

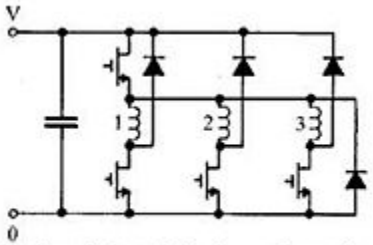

(n+1) switch and diode configuration

- Induction (asynchronous)

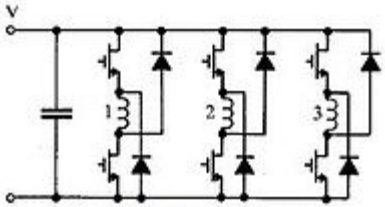

Asymmetric Bridge Converter

- Stepper

Variable Speed Ties it all Together

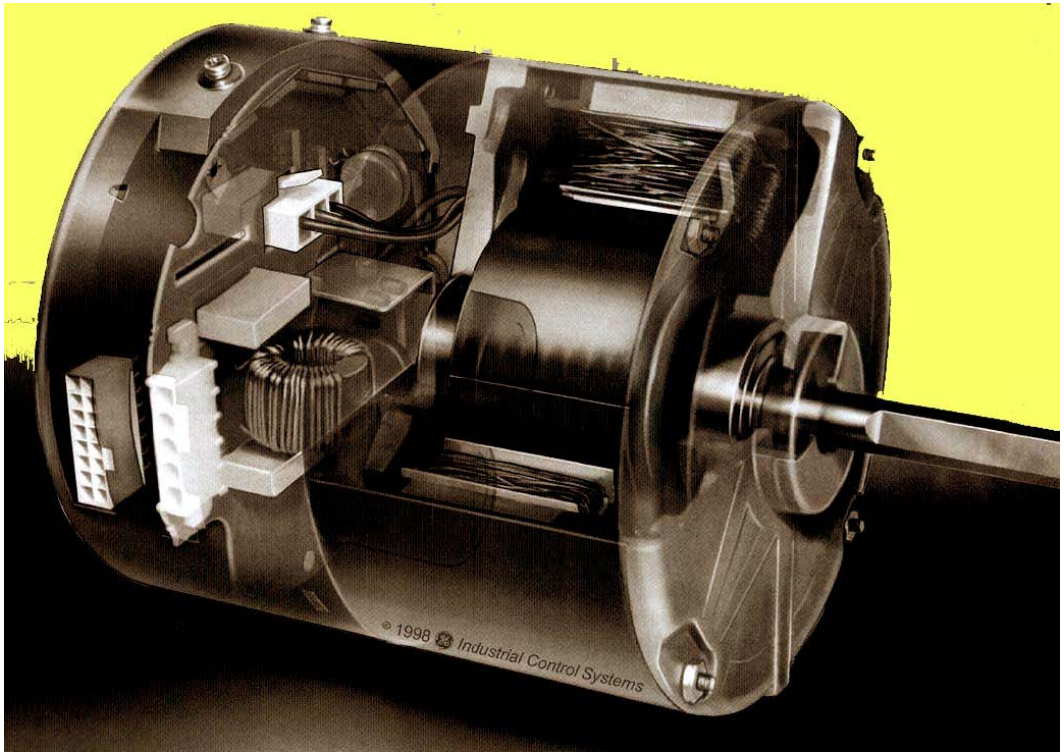

- Fully Modulated ECM provides indoor air with:
  - Quiet Operation
  - Dehumidification
  - Steady Temperatures - No more Hot Flashes

Types of ECM motors

1. On OFF
2. Multiple speed
    1. High
    2. Medium
    3. Low
3. Variable speed
    1. 0-100%

ECM motor characteristics

- Torque linear with speed
- Maximum torque when stationary
- High efficiency
- Permanent magnets on rotor
- Fixed armature

ECM rotor position detection

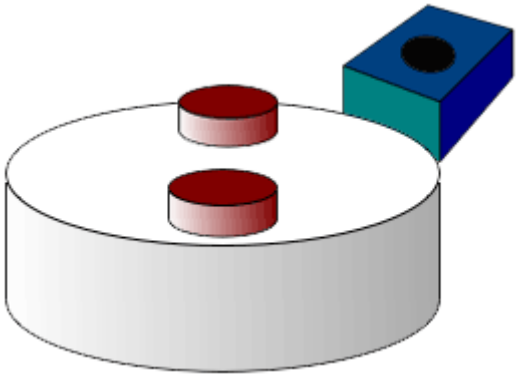

- Hall effect sensors

A transducer that varies its output voltage in response to a magnetic field

- Rotary encoder

An electro-mechanical device that converts the angular position or motion of a shaft or axle to an analog or digital code

Can be based on BACK-EMF ♥

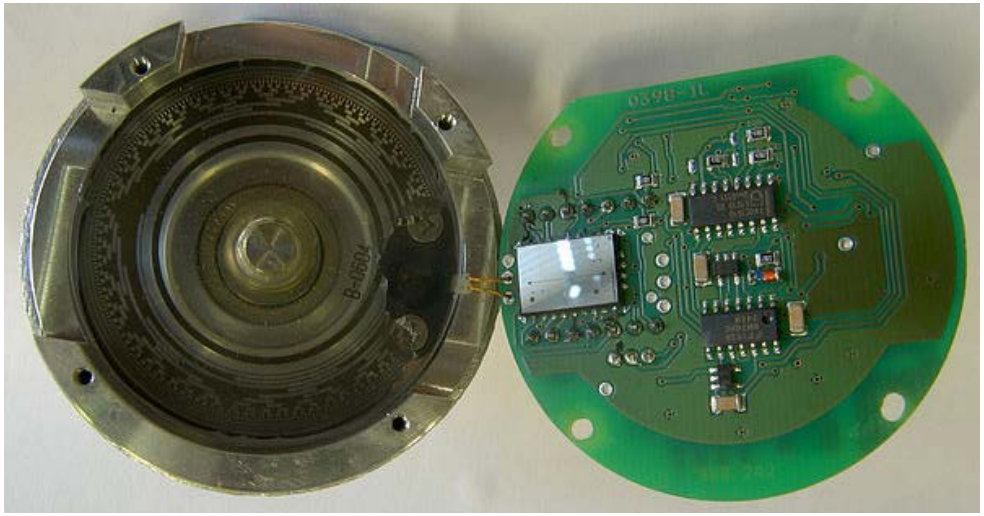

ECM construction

- Conventional or Inrunner
  - Permanent magnets are part of the rotor.
  - Three stator windings surround the rotor

- Outrunner or external-rotor
  - Radial relationship between the coils and magnets is reversed
  - The stator coils form the center or core of the motor, the permanent magnets spin within an overhanging rotor which surrounds the core.

ECM Benefits

- Lower Annual operating costs (25%-75%)
  - PSC motors 12-45% Efficiency
  - ECM motors 65-75% Efficiency
- Small as 80 watts
- Reduced Temperature (around ambient)
  - PCM motors 90-150° F.
- Quieter running
- Lower drying effect during heating season
- Reduced motor stress
  - Reduced starts & slewed speed ramps
- More Precise
- Unlimited air flow selection

ECM versions

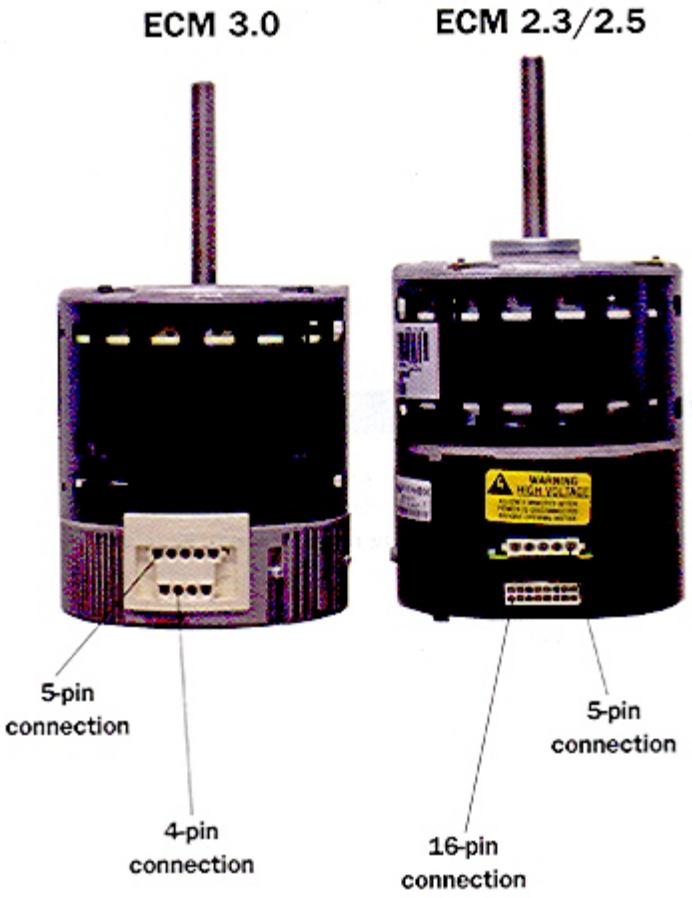

ECM Module Replacement

ECM Module Replacement

- Tools Required:
  - 5/16” nut driver
  - ¼” wrench
- Time: approx 20 minutes
- Techs Needed: 1

Instructions:

- Remove filter access and blower access panels (indoor side)
  - Furthest left panel is removed first
  - Top does not need to be taken off of unit
- Unplug (2) molex connectors from the ECM module
- Remove (2) ¼” bolts from the top of the ECM module
- Replace

ECM Module Replacement

ECM Module Replacement

Remove (2) ¼” bolts from top of ECM module

ECM Module Replacement

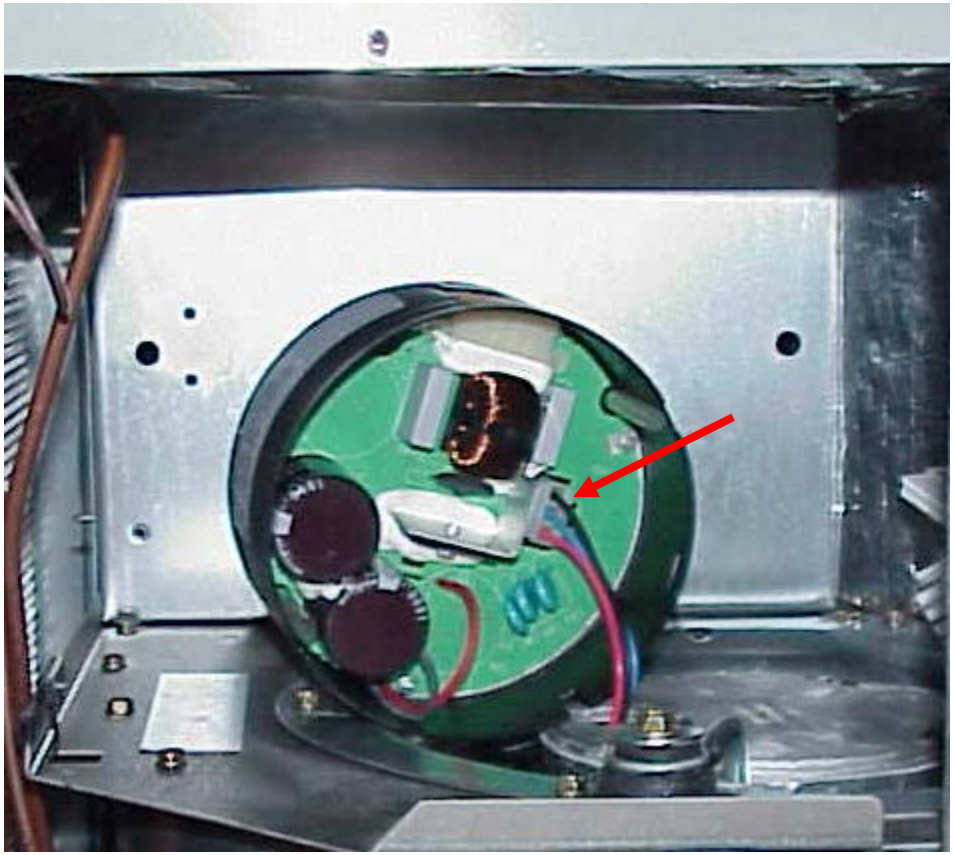

Disconnect molex plug from Module.

ECM Troubleshooting

Power connections
Models 2.0/ 2.3 / 2.5

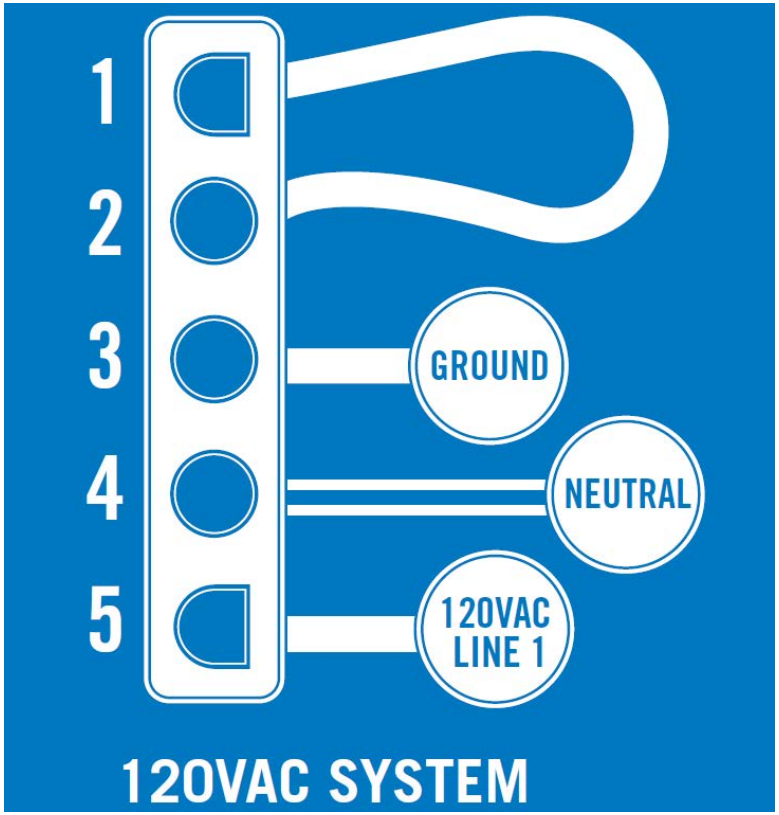

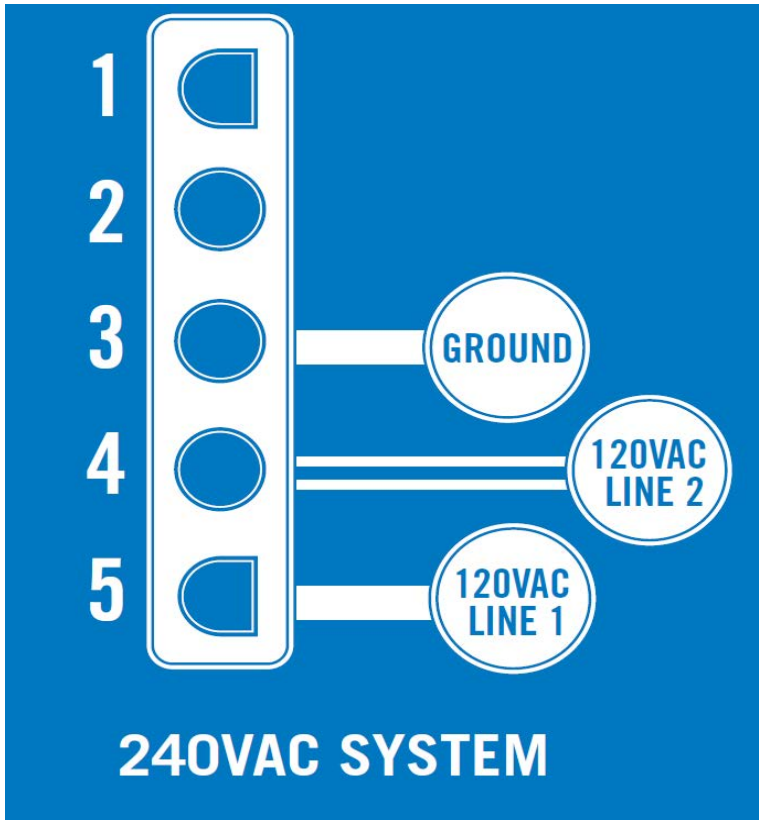

Jumper 1 and 2 for 120 VAC
no jumper for 240 VAC

ECM Connections Diagram

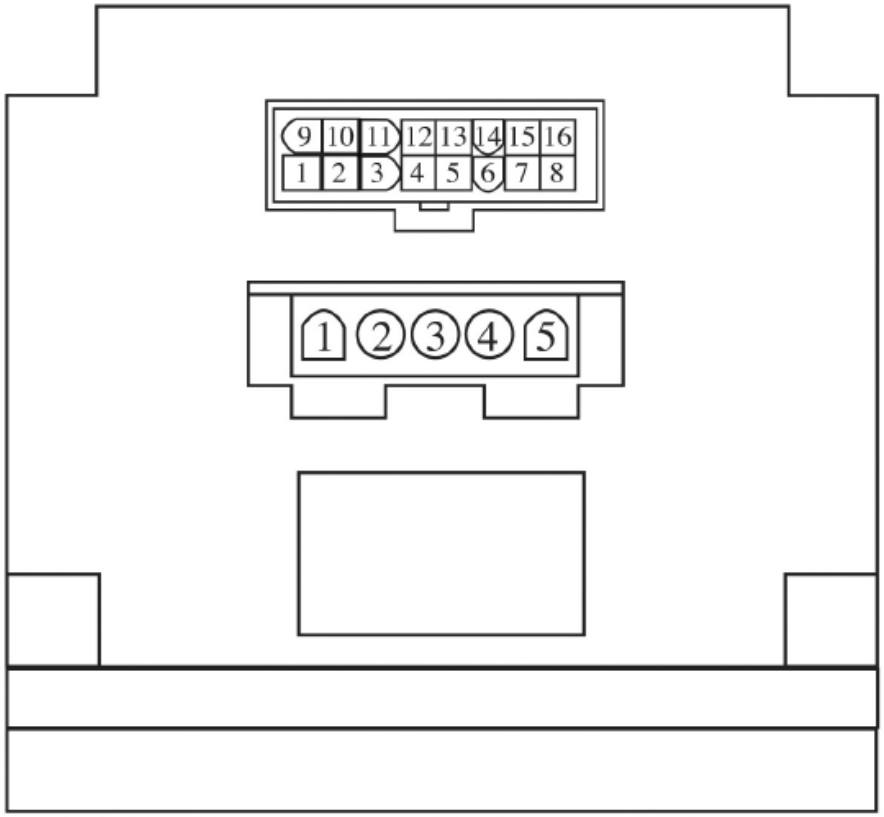

ECM2

Control Connector ***	
PWB Header	AMP 770974-1
PIN	Description
1	C1
2	W/W1
3	C2
4	Delay
5	Cool
6	Y1
7	Adjust
8	Out-
9	D
10	BK/PWM
11	Heat
12	R
13	EM/W2
14	Y/Y2
15	G
16	Out+

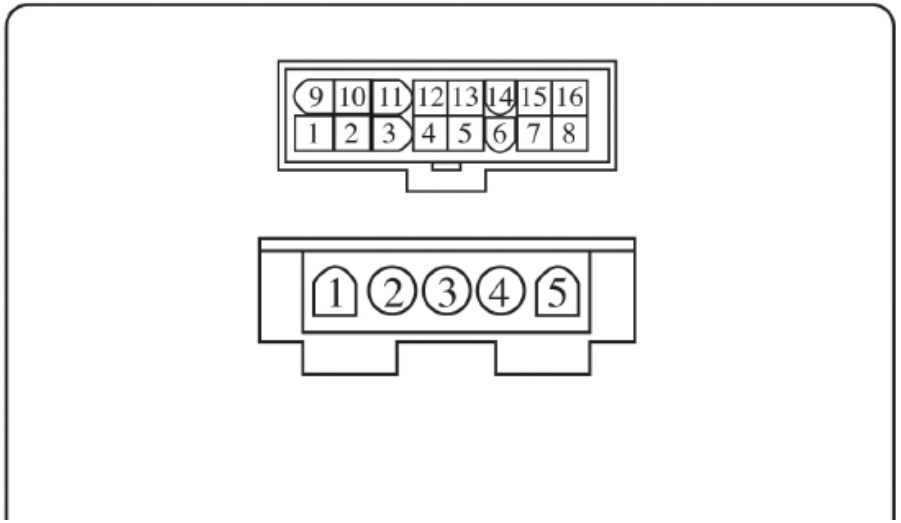

Power Connector *	
PWB Header	AMP 1-350949-0
PIN	Description
1	Jumper PIN 1 to Pin for 120VAC line input *ONLY***
2	
3	Chassis Ground
4	AC Line
5	AC Line

Model X13 Connections

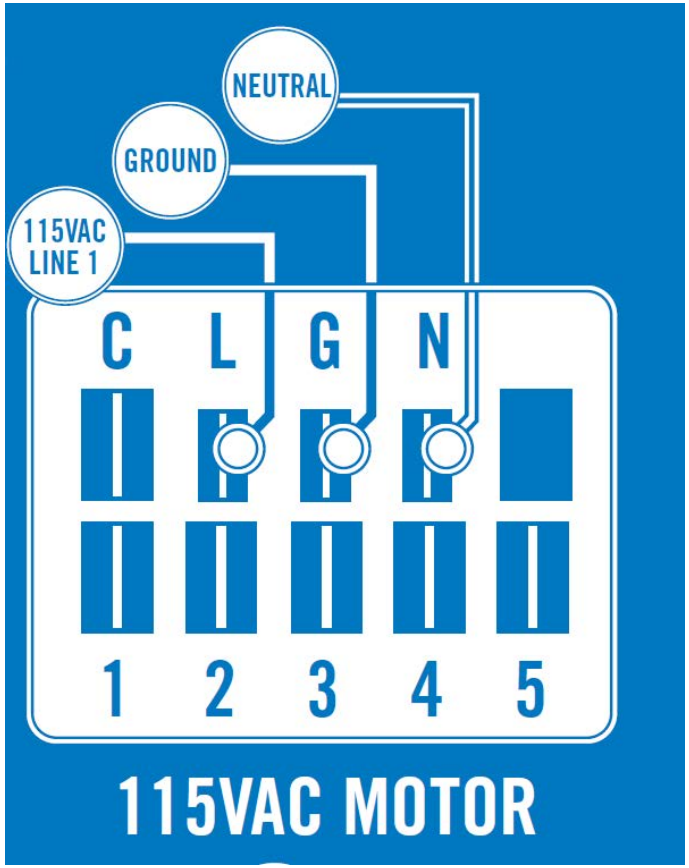

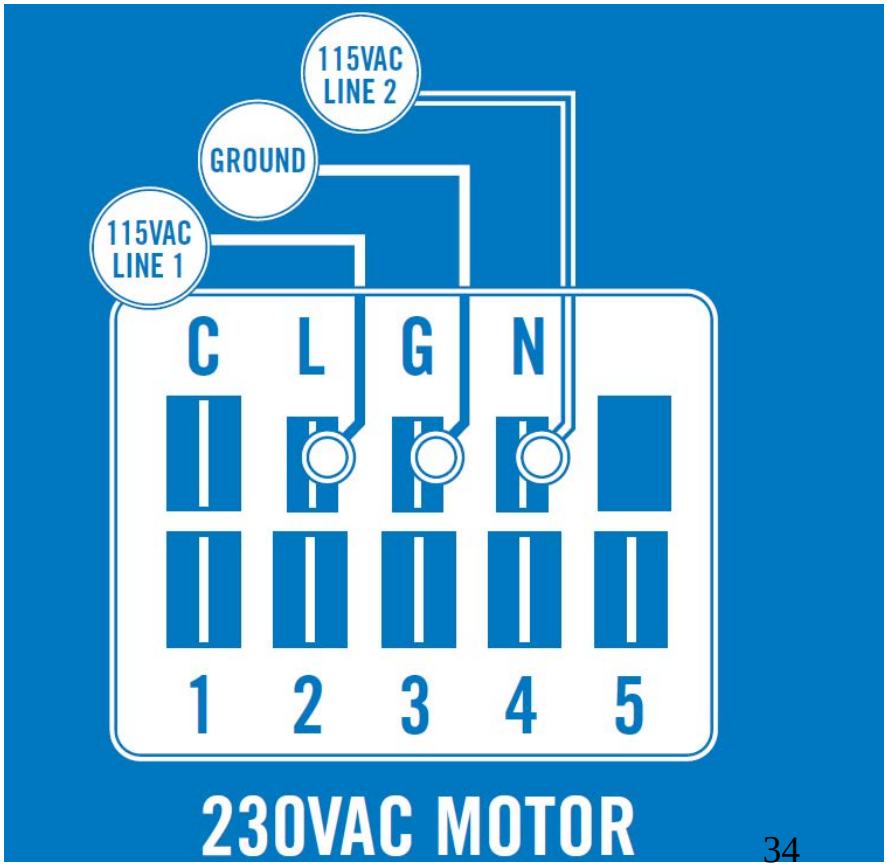

Modle X13 Speed inputs 1-5

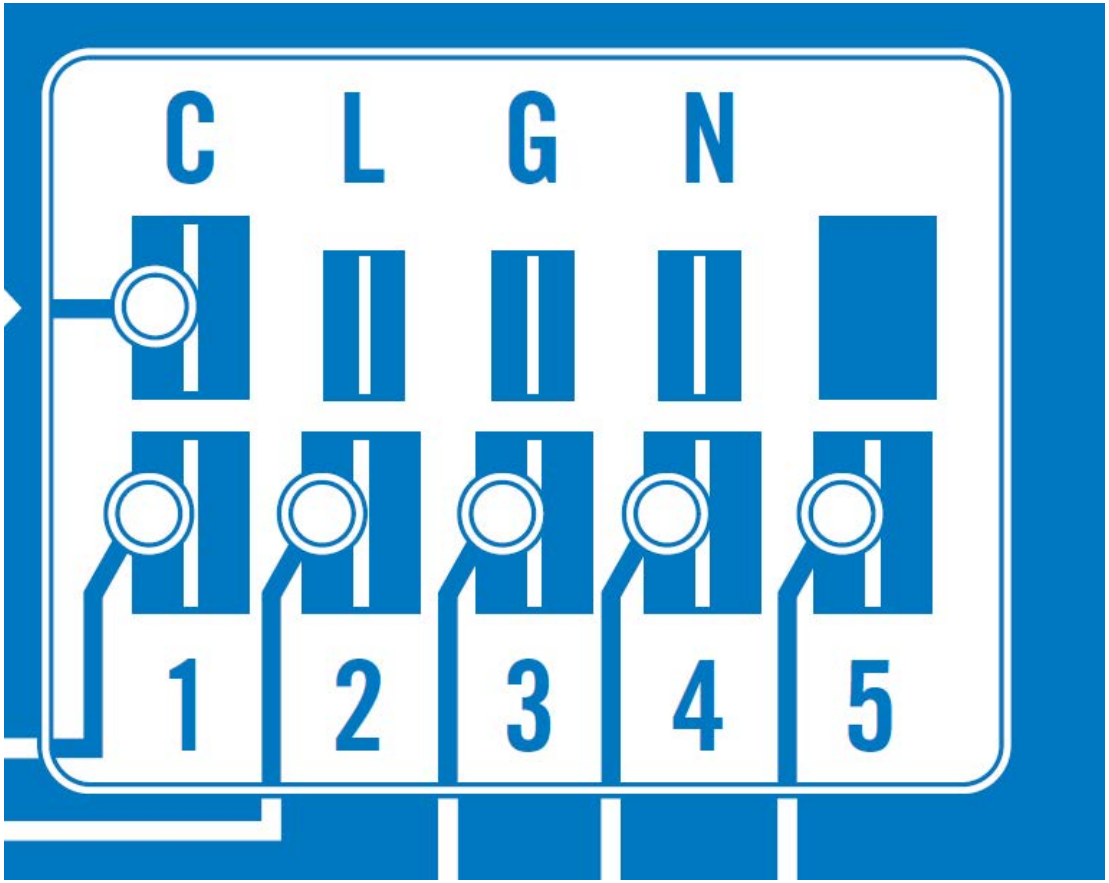

ECM motor

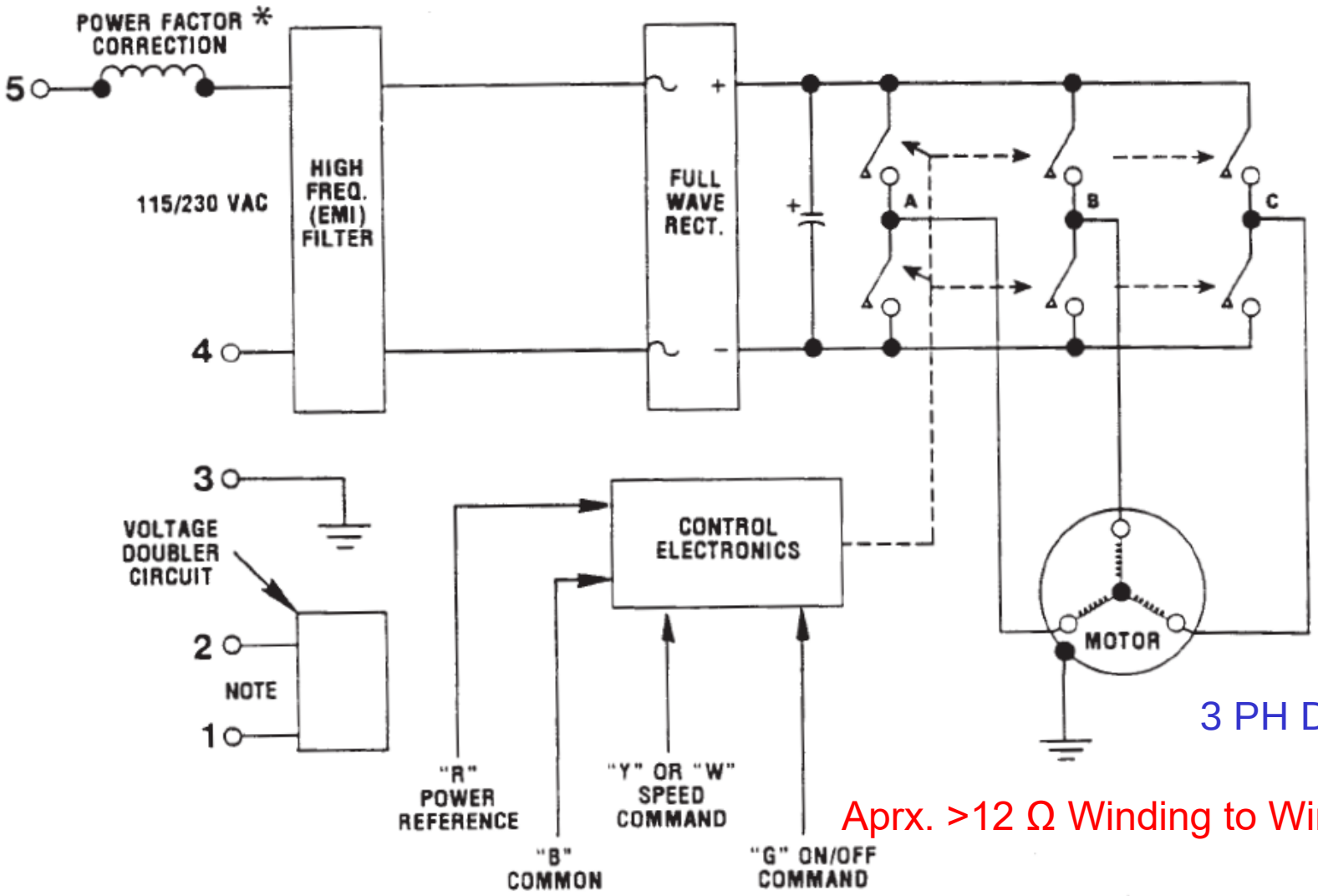

3 PH DC Motor

Aprx. >12 Ω Winding to Winding

One way to test motor & drive

Some Furnaces Units Req. Jumper

24 VAC Hot

24 VAC Common

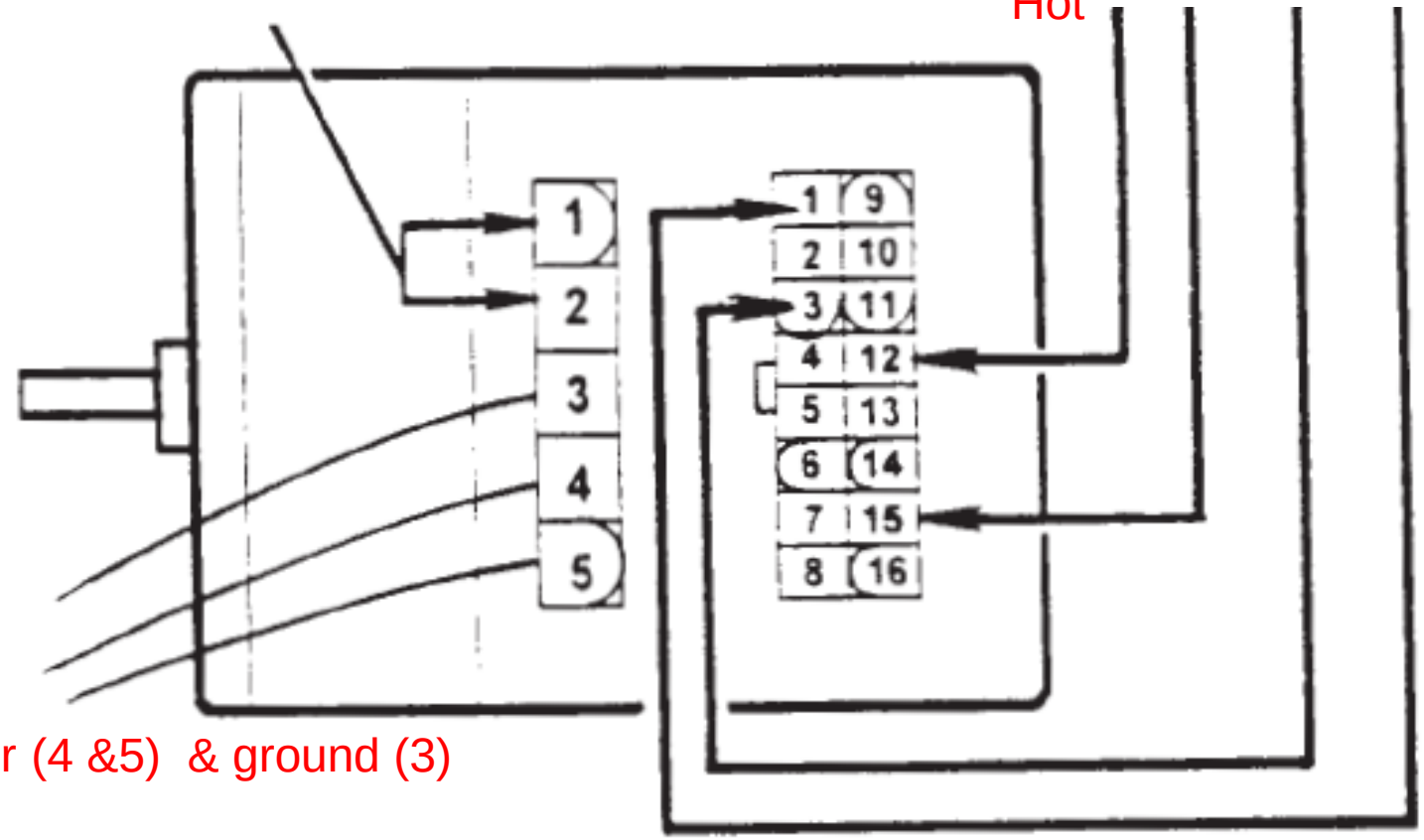

Power (4 &5) & ground (3)

One more way to test motor & drive Runs to 50%

Some Furnaces Units Req. Jumper

9 VDC

9 VDC
Common

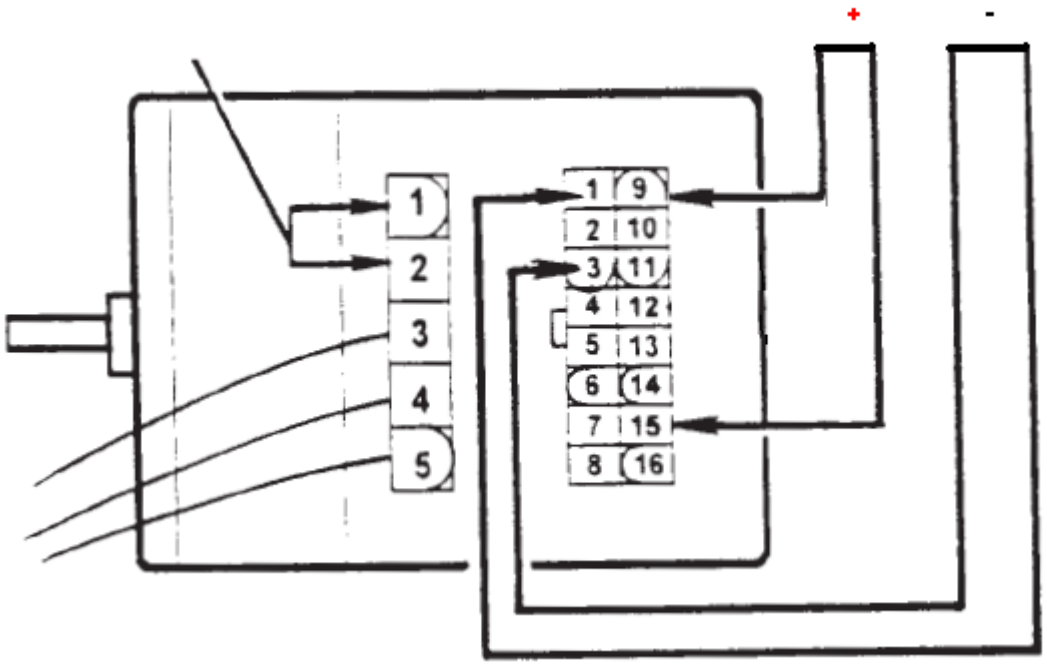

Power (4 &5) & ground (3)

Motor Running with system faults

- Test controller
- Check Wiring
- Check inputs
- Check power
- Check airflow settings
- Check air distribution system for dirt, closed dampers, registers and grills.
- Measure external static pressure (across fan or system) if above design fix system problem.

Motor not running

- Check high voltage inputs
  - Voltage within 15% of ratings
- Check speed reference inputs
- Check motor windings
- Check controller
- Run function tests.

Symptom analysis

- Motor rocks on starting (Normal)
- Motor won’t start (check pwr, connectins, check motor shaft movement, test motor)
- Motor rocks but won’t start (check connections, check wheel tightness, check controller)
- Motor oscillates up and down (Normal with no load apply load and retest)

Symptom analysis

- Motor starts however, runs erratically. (Check power sag, check connections, check control output, check system static, check restrictions) Keep static pressure to a minimum
- Evidence of moisture (Fix source of moisture)

Motor test

- Motor windings R< 20 Ώ
- Each winding within 10% of each other
- R > 100KΏ to ground

ECM Operation

ECM = Electrically Commutated Motor

ECM- Sequence of Operation

- **1st stage Cooling call**
  - Ramps to 25% CFM for 1 minute.
  - Ramps up to 40% CFM for 7.5 minutes.
  - Ramps to 50-65% CFM for remainder of 1st stage cooling call.

- **2nd stage call during 1st stage operation**
  - Ramps to 80% CFM for 7.5 minutes.
  - Ramps to 100% for remainder of 2nd stage cooling call.

ECM- Sequence of Operation

- **2nd stage Cooling call (from “off” position)**
  - Ramps to 50% CFM for 1 minute.
  - Ramps up to 80% CFM for 7.5 minutes.
  - Ramps to 100% CFM for remainder of 2nd stage cooling call.

EBM

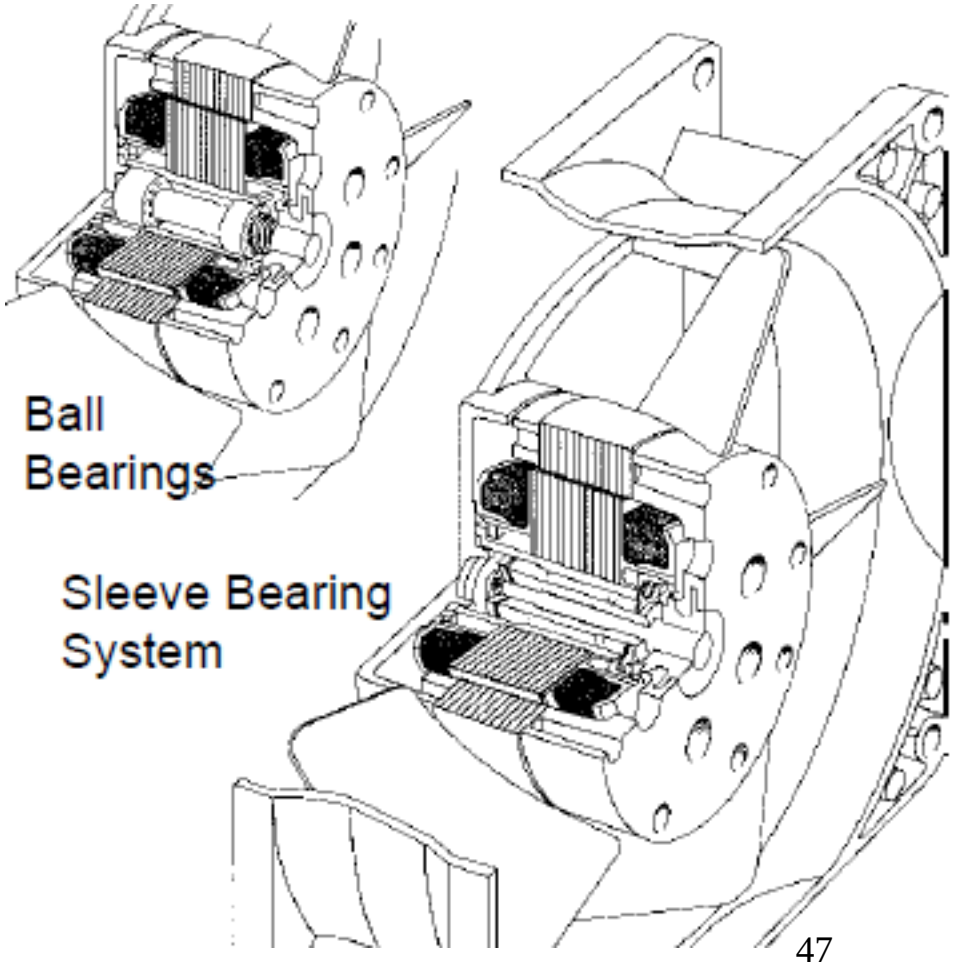

EBM plenum Fan

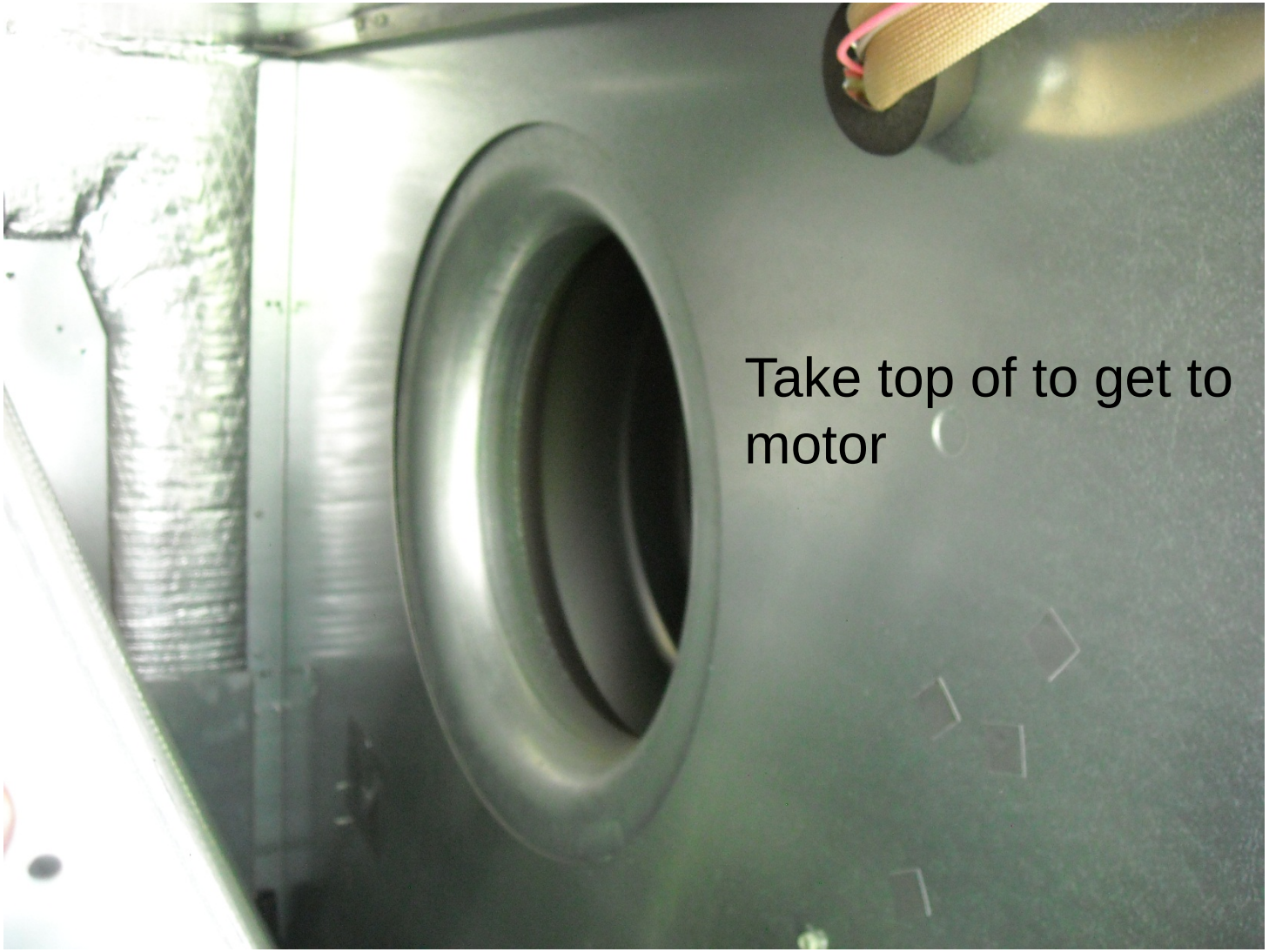

Blower 75009291 REV A

Typical Illustration. Unit may not appear exactly as shown.

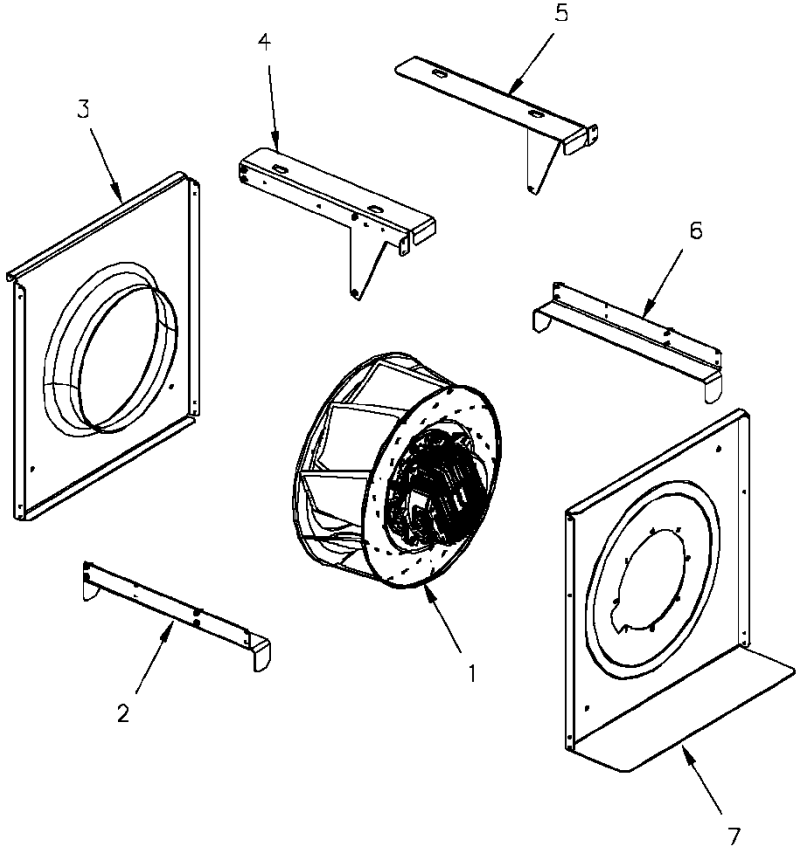

Fan Speed Control

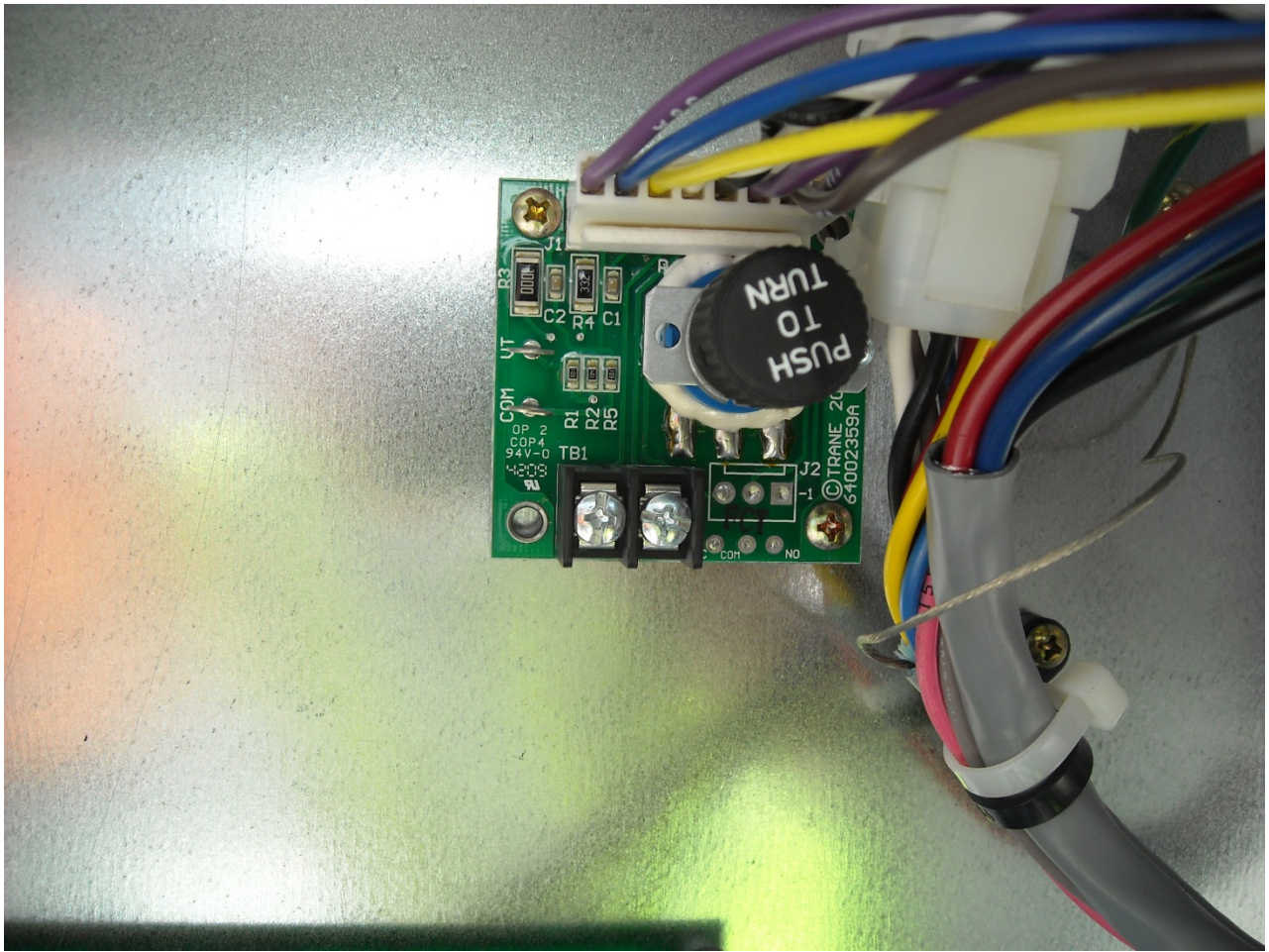

Speed Setup

IDM RPM INDICATION							
RPM	VOLT	RPM	VOLT	RPM	VOLT	RPM	VOLT
217	1.00	605	2.75	1061	4.50	1487	6.25
279	1.25	668	3.00	1126	4.75	1539	6.50
312	1.50	732	3.25	1191	5.00	1588	6.75
362	1.75	797	3.50	1253	5.25	1633	7.00
427	2.00	863	3.75	1315	5.50	1675	7.25
479	2.25	929	4.00	1374	5.75	1700	7.50
543	2.50	995	4.25	1432	6.00		

ECM Engine Controller

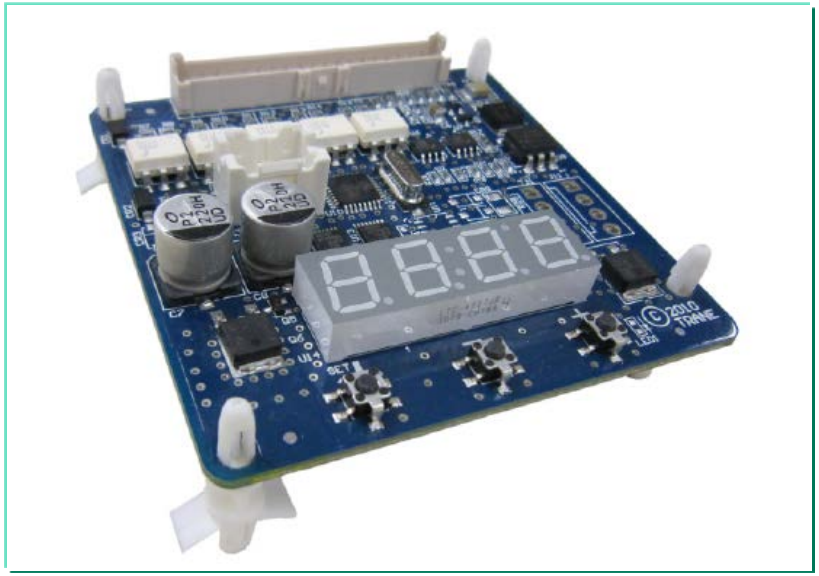

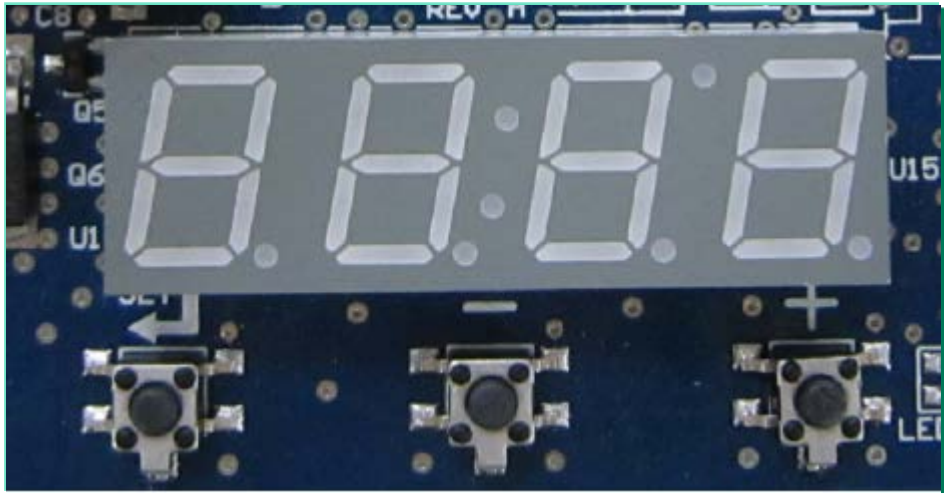

Adapter Board

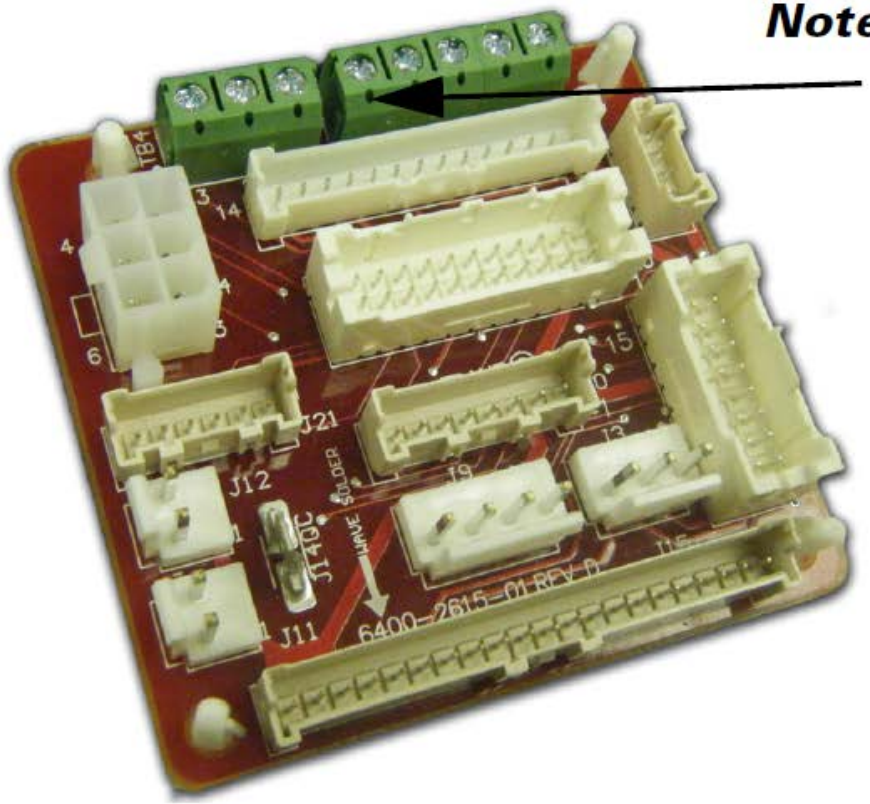

Note: *Customer Low-Voltage Interface for Fan Speeds, Variable Fan Speed, and 24 Vac Supply*

Customer Supplied Terminal Interface

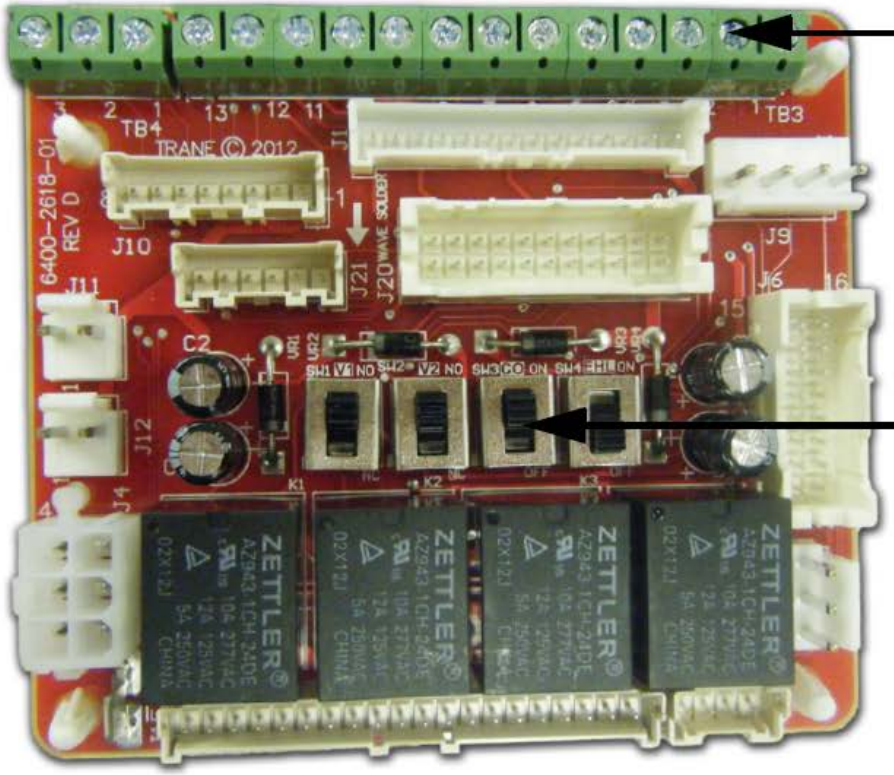

Customer Low-Voltage Interface for Valves, Electric Heat, Dampers, Fan Speeds, Variable Fan Speed, and 24 Vac Supply

Valve(s), Electric Heat, and Changeover Configuration Switches (Factory-Set)

Options Module

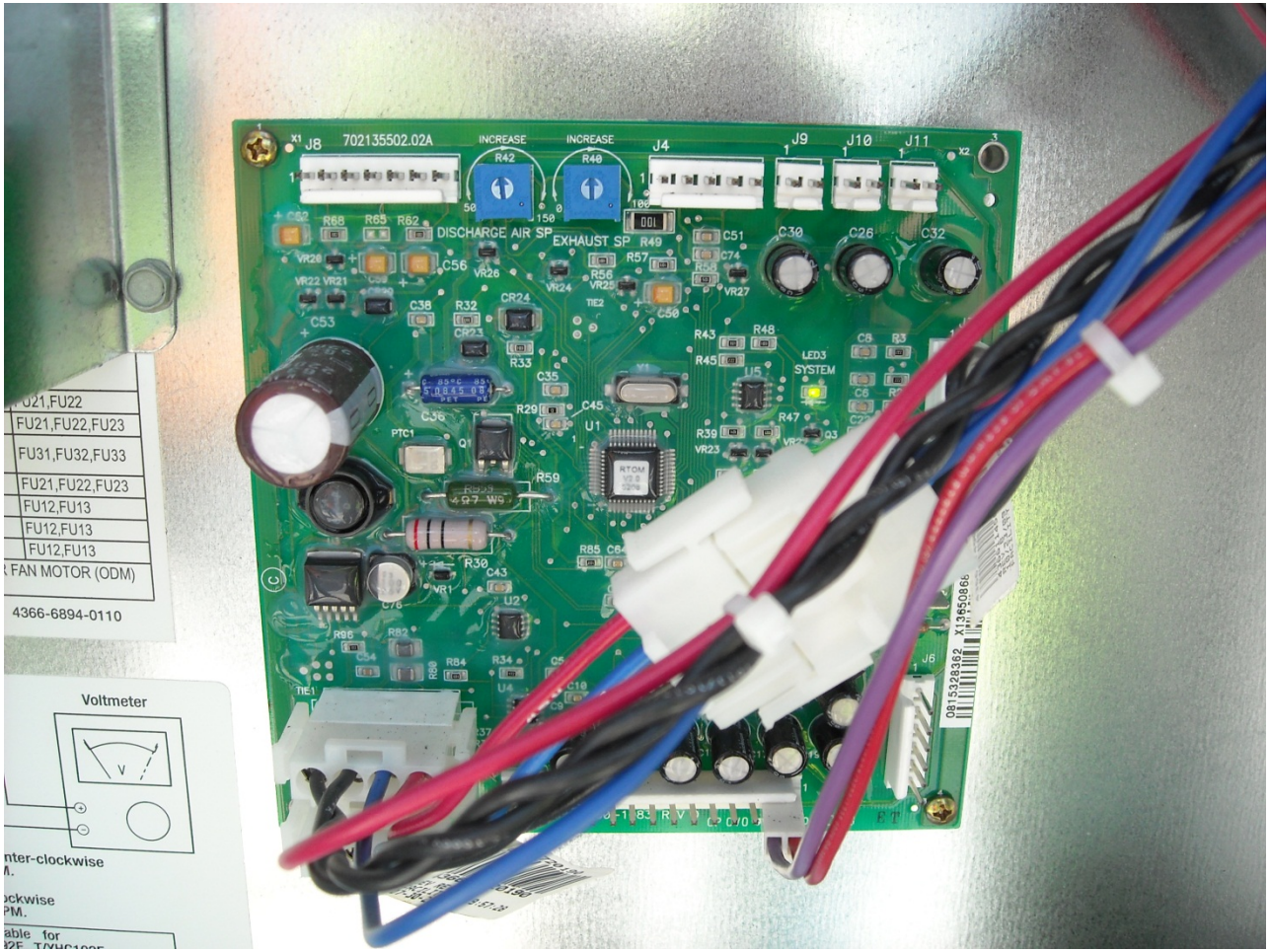

EBM plenum Motor Wiring

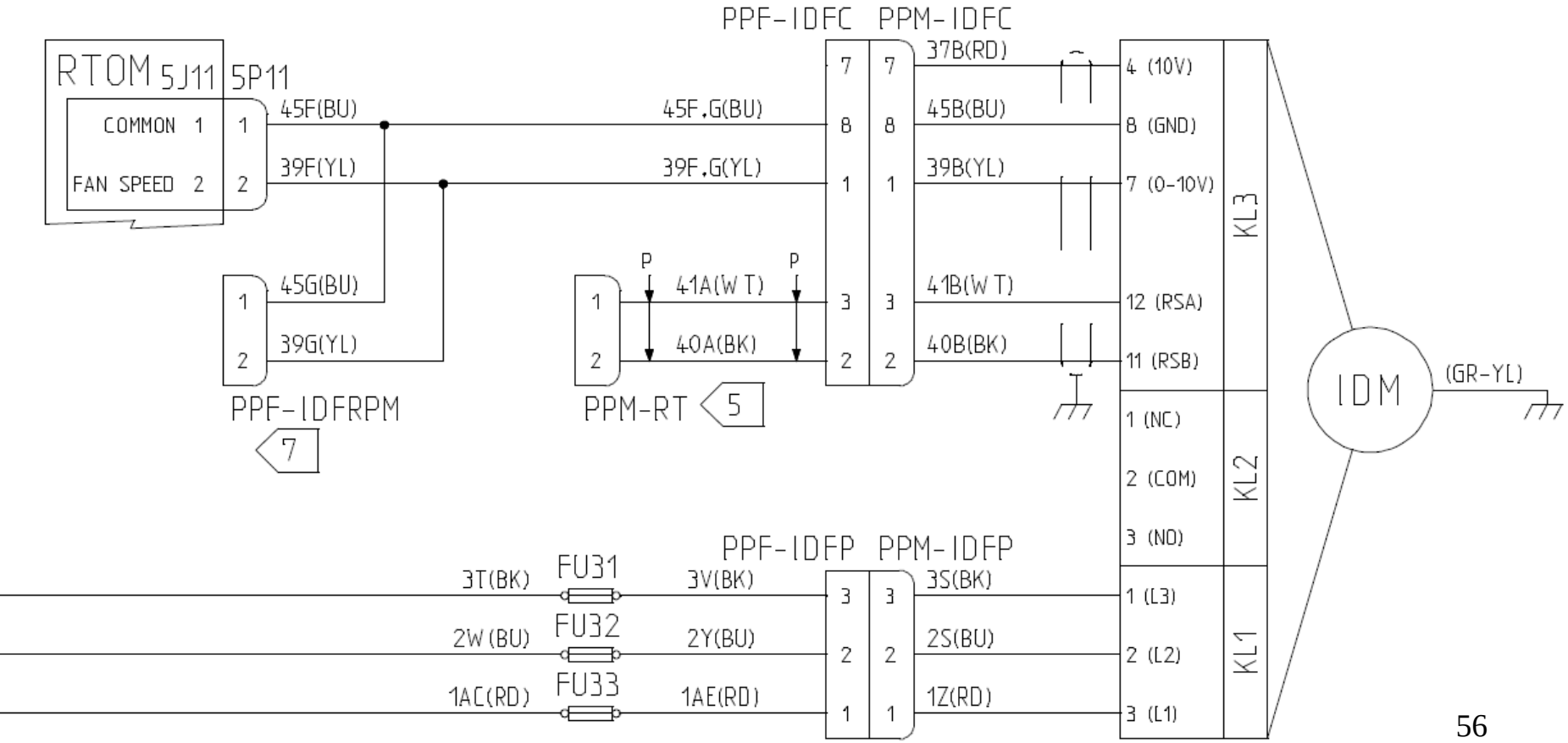

EBM plenum Motor Wiring

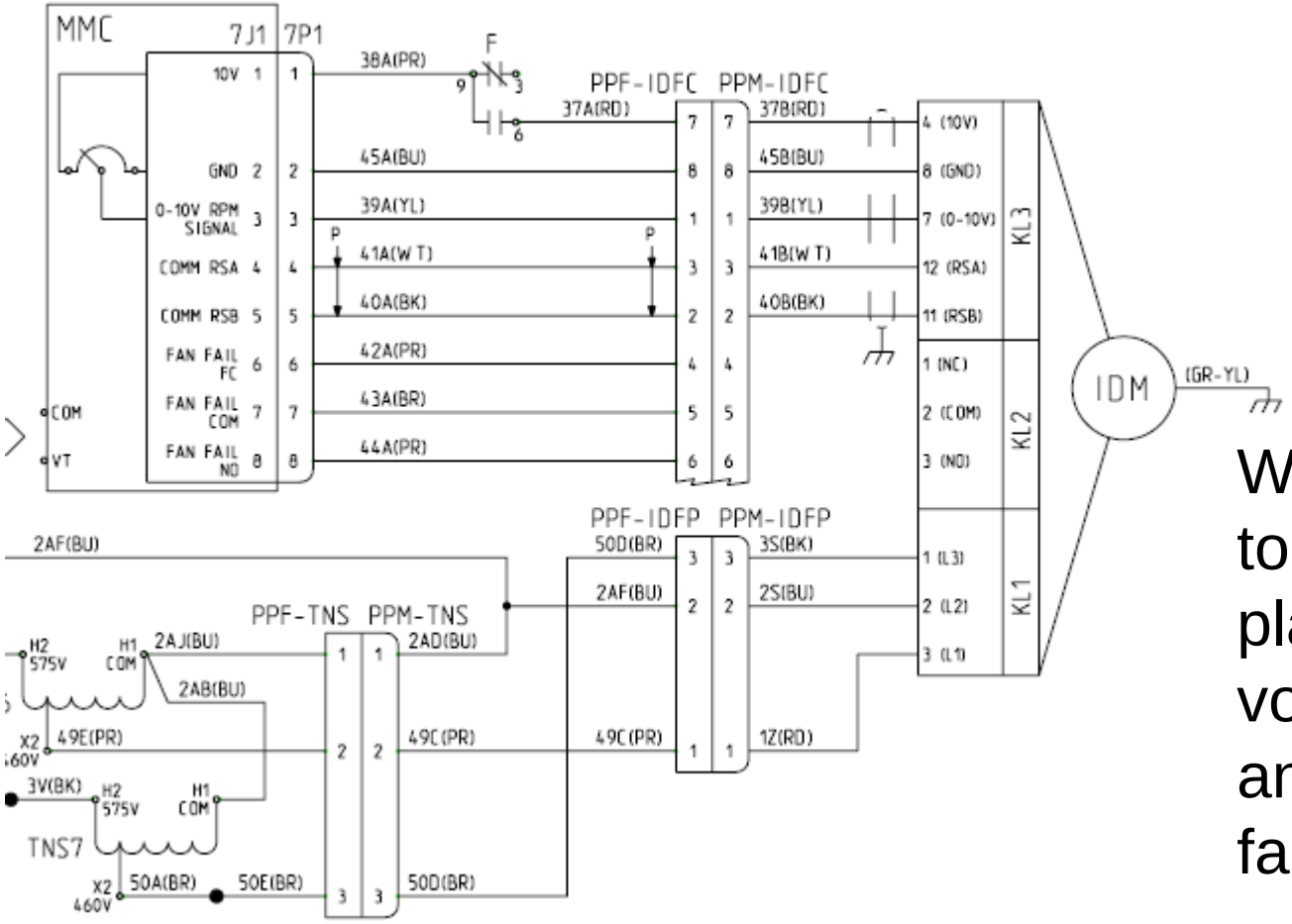

With PWR to motor place 10 volts to 8 and 7 and fan will run

EBM Plenum Motor

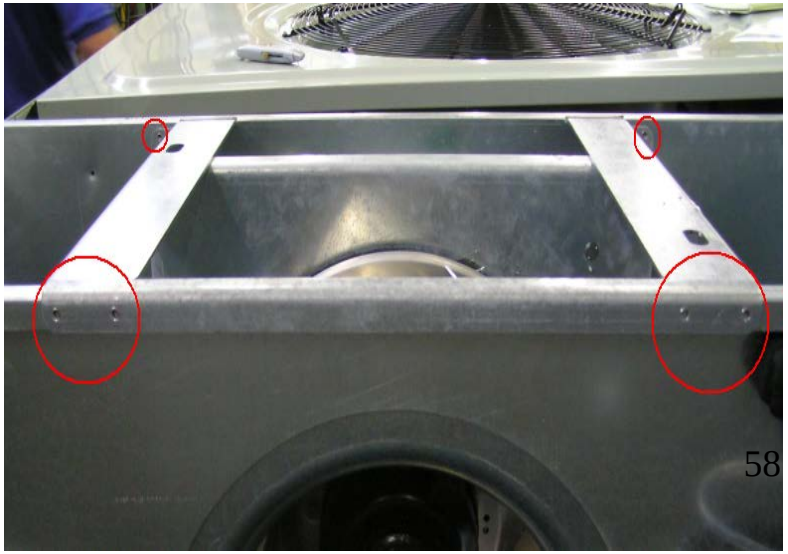

EBM motor

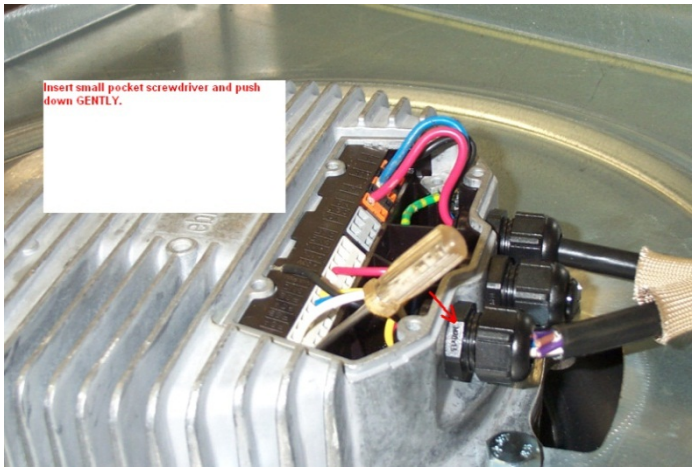

Connections

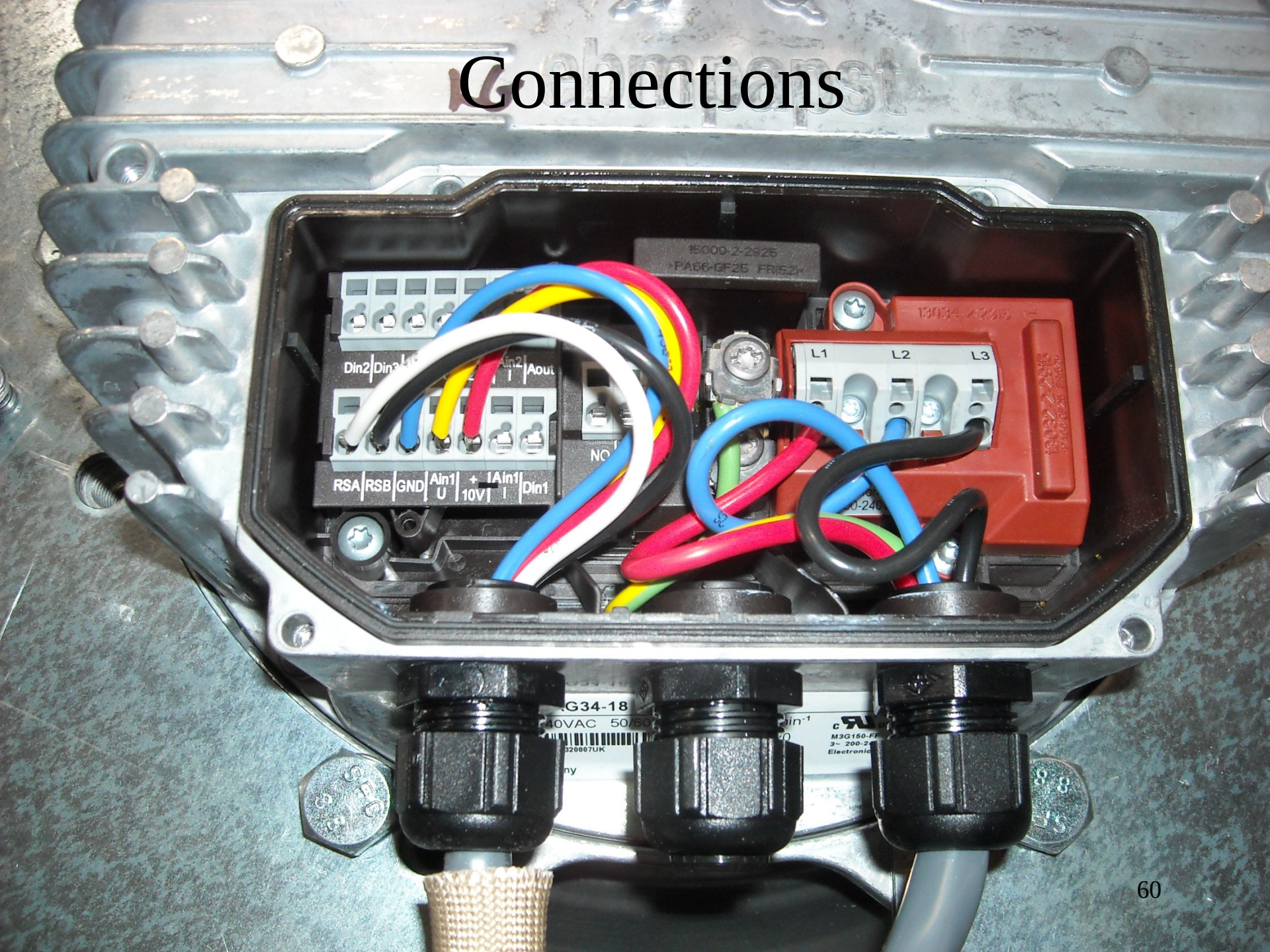

Tabular Performance Data

Std. Air Flow (CFM)	Outlet Velocity (ft/min)	Total Static Pressure (in. wg)															
		0.5		1.0		1.5		2.0		2.5		3.0		3.5		4.0	
		RPM	BHP	RPM	BHP	RPM	BHP	RPM	BHP	RPM	BHP	RPM	BHP	RPM	BHP	RPM	BHP
5950	1714	423	1.22	536	1.75	643	2.35	734	2.96	818	3.62	903	4.40	983	5.24	1054	6.21
6800	1959	451	1.64	555	2.22	651	2.89	742	3.56	821	4.25	895	4.98	971	5.81	1044	6.72
7650	2203	479	2.15	576	2.81	664	3.49	750	4.27	831	5.03	901	5.79	969	6.59	1033	7.44
8500	2448	510	2.78	601	3.52	684	4.24	760	5.04	837	5.91	912	6.76	976	7.59	1037	8.45
9350	2693	542	3.53	629	4.34	705	5.14	777	5.93	848	6.87	917	7.82	986	8.76	1047	9.69
10200	2938	575	4.39	657	5.30	730	6.19	799	7.04	863	7.92	928	8.98	992	10.01	1055	11.03

Std. Air Flow (L/S)	Outlet Velocity (m/s)	Total Static Pressure (Pa.)															
		124.55		249.1		373.65		498.2		622.75		747.3		871.85		996.4	
		RPM	kW	RPM	kW	RPM	kW	RPM	kW	RPM	kW	RPM	kW	RPM	kW	RPM	kW
2808	8.71	423	0.91	536	1.31	643	1.75	734	2.20	818	2.70	903	3.28	983	3.91	1054	4.63
3210	9.95	451	1.22	555	1.65	651	2.15	742	2.66	821	3.17	895	3.71	971	4.33	1044	5.01
3611	11.19	479	1.60	576	2.10	664	2.60	750	3.19	831	3.75	901	4.32	969	4.92	1033	5.55
4012	12.44	510	2.07	601	2.62	684	3.16	760	3.76	837	4.41	912	5.04	976	5.66	1037	6.30
4413	13.68	542	2.63	629	3.24	705	3.83	777	4.43	848	5.13	917	5.83	986	6.53	1047	7.22
4814	14.92	575	3.28	657	3.95	730	4.61	799	5.25	863	5.90	928	6.70	992	7.47	1055	8.23

Airflow form DP

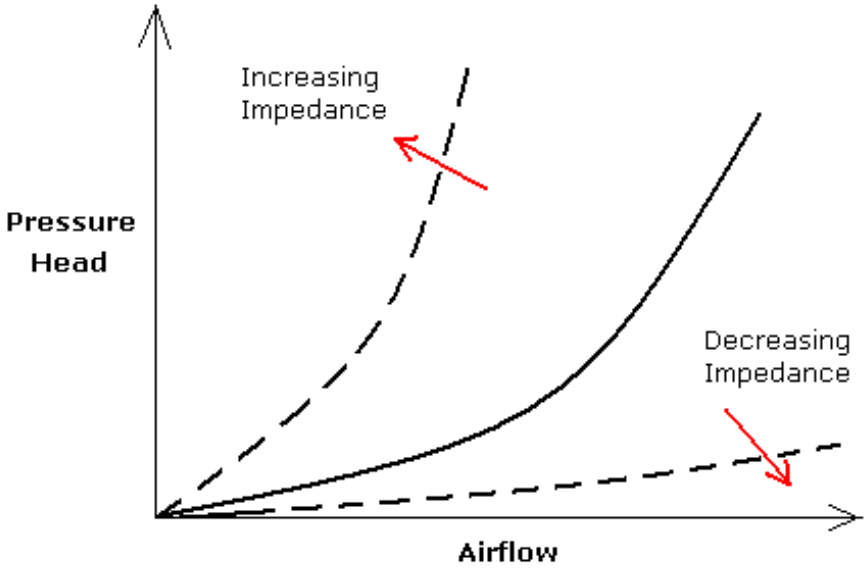

HP VS BHP

1. HP is the output horsepower rating of an engine, while BHP is the input brake horsepower of an engine.

2. B HP is the measurement of an engine's power without any power losses, while HP is BHP less the power losses.

3. HP is measured by hooking up the engine to a dynamometer, while BHP is measured in a controlled environment without anything attached to the engine.

1 bhp equals to: 745.5 watts
1.01389 ps
33,000 ft lbf/min
42.2 BTU/min

Supply Duct Static Pressure